Transmission Plan for Envisaged Renewable Capacity

A Report

(Annexures, Exhibits, Appendices)

Vol-II

Power Grid Corporation of India Ltd.

July, 2012

BLANK

ANNEXURE

BLANK

ANNEXURE-1

Sno	State	Draft 18th EPS				RPO Equv MW cap requirement	RPO requirement through Wind & Solar/SHP	Total RE (MW) (Wind+Solar) /SHP	RE under Off peak condition of System (MW) @ 70% Wind 80% Solar 70% SHP (except Raj)	Exportable RE/Importable RE (MW)
		Peak Demand MW (2016-17)	Energy requirement MU (2016-17)	RPO Obligation (%) 2016-17	Energy with RPO @80% **	0.32	CUF-0.32			
WR										
1	Gujarat	18305	104463	12	10028	4472	3578	9683	7000	3423
2	Mah	27949	168993	12	16223	7234	5787	12398	8770	2983
3	Chhattisgarh	4325	25149	9	1811	807	646	259	181	-465
4	MP	13798	77117	9	5552	2476	1981	366	256	-1725
5	Goa	824	4981	7	279	124	100	30	21	-79
6	DNH	944	6286	7	352	157	126	0	0	-126
7	DD	441	2817	7	158	70	56	0	0	-56
	Sub-Total	**66586**	**389806**	**63**	**34404**	**15341**	**12273**	**22736**	**16229**	**3956**
NR										
8	Raj	12790	74784	12	7179	3201	2561	8000	4350	1789
9	HP	1777	10506	15	1261	562	450	1445	1012	562
10	Delhi	6542	37360	9	2690	1199	960	2	1	-958
11	Haryana	10185	54853	9	3949	1761	1409	108	76	-1333
12	J&K	3323	23333	7	1307	583	466	596	428	-38
13	Punjab	13574	72774	9	5240	2336	1869	349	244	-1625
14	UP	22242	126646	9	9119	4066	3253	648	454	-2799
15	Uttaranchal	2241	12718	9	916	408	327	157	110	-217
16	Chandigarh	439	2247	7	126	56	45	0	0	-45
	Sub-Total	**73113**	**415221**	**86**	**31786**	**14174**	**11339**	**11305**	**6674**	**-4665**
SR										
17	Karnataka	12769	78299	15	9396	4190	3352	6422	4512	1160
18	AP	25202	146812	12	14094	6285	5028	5817	4110	-918
19	TN	18994	110251	15	13230	5900	4720	15377	11065	6345
20	Kerala	4486	25494	9	1836	819	655	44	31	-624
21	Pondicherry	577	3586	7	201	90	72	0	0	-72
	Sub-Total	**62028**	**364442**	**58**	**38756**	**17282**	**13826**	**27660**	**19718**	**5892**
ER										
22	Bihar	5108	29539	7	1654	738	590	77	54	-536
23	Jharkhand	4539	28327	7	1586	707	566	4	3	-563
24	Orissa	5786	34683	9	2497	1114	891	88	62	-829
25	WB	11373	70217	9	5056	2254	1804	160	112	-1692
26	Sikkim	144	528	7	30	13	11	52	36	26
	Sub-Total	**26950**	**163294**	**39**	**10823**	**4826**	**3861**	**381**	**267**	**-3594**
NER										
27	Assam	1817	8947	7	501	223	179	31	22	-157
28	Manipur	218	948	7	53	24	19	6	4	-15
29	Meghalaya	445	2243	7	126	56	45	31	22	-23
30	Nagaland	185	834	7	47	21	17	29	20	4
31	Tripura	315	1291	7	72	32	26	16	11	-15
32	Arunachal	135	552	7	31	14	11	80	56	45
33	Mizoram	285	936	7	52	23	19	37	26	7
	Sub-Total	**3400**	**15751**	**49**	**882**	**393**	**315**	**230**	**161**	**-154**
	Total	***232077***	***1348514***	***295***	***116651***	***52017***	***41613***	***62312***	***43049***	***1435***

Note : *Studies have bveen carried out considering RE capacity addition programme for Wind/Solar & Small Hydro proj. in severn RE rich states. Capacity addition thorugh other RE resources not considered.Accordingly the RPO target has been considred about 80% of the total proposed target.*

Annexure 2-A

Tamil Nadu Intra State Transmission System [DPR]

- 2 x 315 MVA, 1 x 200 MVA Kayathar 400/230-110kV in Tirunelveli area
- 2 Nos. 400kV bay provision at 400/230-110kV Sholinganallur/Ottiampakkam Substation in Chennai area for Pugulur-Ottiampakkam 400 KV D/c (Quad)
- 4 Nos bay provision at Singarapet 400/230kV in Vellore area for LILO of Pugulur-Ottaimpakkam 400kV D/c Quad line at Singarapet 400kV S/s
- 4 Nos bay provision at Karaikudi 400kV Substation (Kayathar-Karaikudi 400kV D/c (Quad) line & Karaikus-Pugulur 400kV D/c (Quad))
- 4 Nos bay provision at Pugulur 400kV Substation (Pugulur-Ottiyambakkam & Karaikudi – Pugulur 400kV D/c (Quad))
- Kayathar-Karaikudi 400kV D/c (Quad)
- Karaikudi – Pugulur 400kV D/c (Quad)
- Pugulur - Singarapet - Sunguvarchatram/ Ottiyambakam 400kV D/c (Quad)
- Establishment of 230/110kV, 3 x 100 MVA Substation at Vannikonendal in Tirunelveli area (Sanction Accorded by TANTRANSCO)
- LILO of Kayathar-Anupankulam 230kV S/c at Kayathar
- LILO of Kayathar-Pasumalai 230kV S/c at Kayathar
- Kayathar - Vannikonendal 230kV D/c
- Vannikonendal - Common point 230kV D/c
- Common point - Pannerkulam 230kV S/c
- Common point - Villisen 230kV S/c
- Kayathar - Ayynaruthu 110kV D/c
- Vannikonendal (220 kV) - Vannikonendal 110kV D/c
- Vannikonendal - South VagaiKulam 110 kV S/c
- Vannikonendal - Sundankurichi 110 kV S/c
- Vannikonendal - Uthumalai 110 kV S/c
- Vannikonendal - Ayyanaruthu 110 kV S/c

Broad Estimated Cost: Rs. 2593.5 Cr*

** Excluding elements identified towards strengthening within state for conveyance to ISTS transfer*

Annexure 2-B

Tamil Nadu Inter-State strengthening requirements

a) **Transmission line**

- New Pugulur - Udumalpet 400kV D/c
- New Pugulur - Vagaral 400kV D/c (Quad)
- New Pugulur – Pugulur 400kV D/c (Quad)
- LILO of Tuticorin Pool-Salem 765kV line at New Pugulur (initially opt. at 400kV)
- ± 500 kV, 2500 MW New Pugalur- Hyderabad HVDC Bipole

b) **Substation**

- Establishment of ± 500 kV, 2500 MW HVDC Station at New Pugulur
- 1 x 125 MVAR, 420 kV Bus Reactor each at Salem & Hosur Substations

Annexure 2-C

Tamil Nadu strengthening within state for conveyance to ISTS

a) **Transmission line**

- Kayathar - Kanarpatty 400 kV Twin DC ***(Earlier part of the system proposed in DPR by TANTRANSCO)***
- Kanarpatti-Tirunelveli (PGCIL) 400kV D/c (Quad) ***(Earlier part of the system proposed in DPR by TANTRANSCO)***
- Kayathar - Tennempatty 400kV D/c (Quad)
- Thappagundu – Anikadavu 400kV D/c
- LILO of one ckt of Thappagundu – Anikadavu 400kV line at Udumalpet
- Udumalpet - Vagarai 400kV D/c
- Rasipalayam - Vagarai 400kV D/c
- Salem - Singarpet 400kV D/c
- Salem - Rasipalayam 400kV D/c
- Kayathar - TT Auto 230kV D/c
- Veeranam - Thirunelveli 230kV D/c
- Veeranam - Kodikuruchi 230kV D/c
- OK Manadapam - Thudiyalur 230kV D/c
- Ingur - Thiruppur 230kV D/c
- Arasur - M.C Patty 230kV D/c
- Arasur - Thiruppur 230kV D/c
- Sembatti - Madurai 230kV D/c
- Samugarengapuram – Kanarpatty 230kV D/c
- Samugarengapuram – Khayathar 230kV D/c
- Maranthai - Kanarpatti 230kV D/c
- Valliyoor - Khayathar 230kV D/c (Al-59)
- Kumarpuram - Kanarpatty 230kV D/c
- Cuddlore – Nyveli 230kV D/c
- Villupuram – Nyveli 230kV D/c
- Villupuram – Spkoil 230kV D/c

b) Substation

- Establishment of 400/230kV 3 x 315 MVA Kanarpatty Substation in Tirunelveli area including 2 Nos. 400kV bay extension at Tirunelveli (PGCIL) 400kV Substation-***(Earlier part of the system proposed in DPR by TANTRANSCO)***
- Establishment of 3 x 100 MVA, 230 kV Substation at Maranthai
- Establishment of 3 x 100 MVA 230 kV Substation at Valliyoor
- Establishment of 3 x 150 MVA 230 kV Substation at Samugarengapuram
- Establishment of 2 x 100 MVA 230 kV Substation at Kumarapuram
- Installation of 2x100 MVA, 230/110kV transformer at Sembatti, Anupankulam, Cuddalore & Villupuram
- Installation of 2x150MVA, 230/110kV transformer at Pudukottai & Thiruvannamalai
- Establishment of 400/230 kV, 4 x 315 MVA Substation at Tennempatty
- Establishment of 400/110 kV, 4 x 200 MVA Substation at Thappagundu
- Establishment of 400/230 kV, 2x315 MVA & 400/110 kV, 2 x 200 MVA Substation at Anikadavu
- Establishment of 400/230 kV, 2x315 MVA & 400/110 kV, 3 x 200 MVA Substation at Rasipalayam
- Establishment of 400/230 kV, 4x315 MVA & 400/110 kV, 2 x 200 MVA Substation at Vagarai S/s
- 1 x 150 MVAR, 420 kV Controlled Bus Reactor (TCR) each at Rasipalayam & Thappagundu Substations

Broad Estimated Cost: Rs. 2498 Cr

Annexure 3-A

Andhra Pradesh Intra State Transmission System (DPR)

a) Transmission line

- Hindupur – Madhugiri 400kV D/c (Quad)
- Hindupur – Kondapur 400kV D/c (Quad)
- Uravakonda - Gooty 400 kV D/c (Quad)
- Porumamilla – Kondapuram 220kV D/c (Single Moose)
- Chakrayapeta – Kondapuram 220kV D/c (Single Moose)
- Betamcherla – Kondapuram 220kV D/c (Single Moose)
- Jammalamadugu – Kondapuram 220kV D/c (Single Moose)
- Thirumalaipalle – Kondapuram 220kV D/c (Single Moose)

b) Substation

- Establishment of 220/132kV, 2x100 MVA Substation at Porumamilla
- Establishment of 220/132kV, 2x100 MVA Substation at Chakrayapeta
- Establishment of 220/132kV, 2x100 MVA Substation at Betamcherla
- Establishment of 220/132kV, 2x100 MVA Substation at Jammalamadugu
- Establishment of 220/132kV, 2x100 MVA Substation at Thirumalaipalle
- Establishment of 400/220kV, 4x315 MVA Substation at Kondapuram

Broad Estimated Cost : Rs. 1080 Cr*

** Excluding elements identified towards strengthening within state for conveyance to ISTS transfer*

After review of the above scheme in the joint meeting of POWERGRID, APTRANSCO and CEA held on 24.04.2012 & 25.04.2012 the above DPR was modified as below :

- Hindupur – Kondapur 400kV D/c (Quad) -------- Deleted
- Uravakonda - Gooty 400 kV D/c (Quad) --------- Deleted
- Uravakonda - Mehaboobnagar 400 kV D/c (Quad) --------- Added
- Uravakonda - Kondapur 400 kV D/c --------- Added
- Kondapur - Kurnool (APTRANSCO) 400 kV D/c (Quad) --------- Added

Annexure 3-B

Andhra Pradesh Inter-State strengthening requirements

a) Transmission line

- 400 kV Srisailam - Kurnool New D/c
- 400kV New Hyderabad- Hyderabad D/c (Quad)
- ± 500 kV, 2500 MW New Pugulur - Hyderabad HVDC Bipole line

b) Substation

- ± 500 kV, 2500 MW HVDC Station at Hyderabad
- 1x125 MVAR, 420kV Bus Reactor at Kurnool New S/s

Annexure 3-C

AP Transmission strengthening within state for conveyance to ISTS

a) Transmission line

- Hindupur - Uravakonda 400kV D/c ***(Earlier part of the system proposed in DPR by APTRANSCO)***
- Pampanur Tanda - Hindupur 220kV D/c (Twin Moose) ***(Earlier part of the system proposed in DPR by APTRANSCO)***
- Penukonda – Hindupur 220kV D/c (Single Moose) ***(Earlier part of the system proposed in DPR by APTRANSCO)***
- Vajrakarur SS –Uravakonda 220kV D/c (Twin Moose) ***(Earlier part of the system proposed in DPR by APTRANSCO)***
- Borampalli SS –Uravakonda 220kV D/c (Twin Moose) ***(Earlier part of the system proposed in DPR by APTRANSCO)***
- 220 kV Kalyandurg – Ananthpur D/c
- 220 kV Kurnool – Brahmakotkur D/c
- 220 kV Mailaram – Shankarapalli D/c
- 220 kV Shankarapalli – Shapurnagar D/c
- 220 kV Ramagundam-S – Ramagundam-pvt D/c
- 220 kV Karnool – AP Carbide D/c
- 220 kV Kadapa – Rajampet D/c
- 220 kV Wanaparthy – Brahmakotkur D/c
- 220 kV Mehaboobnagar – Bhotnagar D/C (AL-59)
- 220 kV Mehaboobnagar – Juralaprkr D/c
- 220 kV Bhotnagar - Kalwakurthy DC

b) Substation

- Establishment of 220/132kV, 2x100 MVA Substation at Pampanur ***(Earlier part of the system proposed in DPR by APTRANSCO)***
- Establishment of 220/132kV, 2x100 MVA Substation at Penukonda ***(Earlier part of the system proposed in DPR by APTRANSCO)***
- Establishment of 220/132kV, 1x100 MVA Substation at Vajrakarur ***(Earlier part of the system proposed in DPR by APTRANSCO)***

- Establishment of 220/132kV, 1x100 MVA Substation at Borrampalli
  (Earlier part of the system proposed in DPR by APTRANSCO)
- Establishment of 400/220kV, 4x315 MVA Substation at Uravakonda
  (Earlier part of the system proposed in DPR by APTRANSCO)
- Establishment of 400/220kV, 3x315 MVA Substation at Hindupur
  (Earlier part of the system proposed in DPR by APTRANSCO)
- Installation of 400/220kV, 2x315 MVA transformer at Mailaram, Hyderabad AP, Uravakonda & Kurnool (AP Transco) S/s and 3 x 315 MVA transformers at Mehaboobnagar S/s
- Augmentation of 220/110 kV, 1x100 MVA transformer at Porumamilla, Betamcherla, Jammalamadugu, Thirumalaipalle S/s 3x100 MVA transformers at Vajrakarur S/S, 2x150 MVA transformer at Pampanur and 3x150 MVA at Borrampalli
- 1x150 MVAR, 420kV Controlled Bus Reactor (TCR) each at Kondapur & Hindupur S/s

Broad Estimated Cost: Rs. 1486 Cr

Annexure 4

Karnataka Transmission strengthening within state for conveyance to ISTS

a) **Transmission line**

- Raichur – Jurilaproya 220kV D/c
- Hiryur– Chitrdurga 220kV S/c to D/c Conversion (AAAC moose)
- Chitrdurga– Davangiri 220kV S/c to D/c Conversion (AAAC moose)
- Madhugiri - Gowribidanur 220kV D/c
- Chintamani – Malur 220kV D/c
- Mysore – Hootgalli 220kV D/c
- Somanhalli – HSR Layout 220kV D/c
- Somanhalli – Yerandahalli 220kV D/c
- Kushtagi-Lingasugur 220kV D/c
- Shimogha- Kudermukh 220kV D/c

b) **Substation**

- 1x150 MVAR, 420kV Controlled Bus reactor (TCR) one each at Hiriyur & Davangiri

Broad Estimated Cost : Rs. 466 Cr

Annexure 5-A

Gujarat Intra State Tr. System Strengthening [DPR]

i) For Wind Farms

a) Transmission line

- Varsana – Halvad 400 KV D/c line (Uad. Moose)
- Bhatia – Kalavad – Kangasiyali 220 KV D/c (AAAC Moose)
- Morbi – Tankara – Chorania 220 kV D/c (AAAC Moose)
- Amreli – Jasdan 220 kV D/c (AAAC Moose)
- Nakhatrana – Varsana 220 kV D/c (ACSR Zebra)
- Bhatia (220 KV) – Bhatia (132 KV) 132 kV D/c (ACSR Panther)

b) Substation

- Establishment of 400/220 KV, 2 x 315 MVA Substation at Halvad
- Establishment of 220/132 KV, 2 x 100 MVA Substation at Bhatia
- Establishment of 220/66 KV, 1 x 100 MVA Substation at Tankara
- Establishment of 220/66 KV, 1 x 100 MVA & 220/132 KV, 1 x 100 MVA Substation at Jasdan

ii) For Solar Parks

a) Transmission line

- Charanka-Sankhari 400KV D/c
- Charanka-Jangral 220KV D/c (Al-59)

b) Substation

- Establishment of 400/220KV, 2x315 MVA Substation at Charanka

Broad Estimated Cost : Rs. 1500 Cr*

** Excluding elements identified towards strengthening within state for conveyence to ISTS transfer*

Annexure 5-B

Gujarat Transmission System For Solar Park-II (Transmission strengthening within state for conveyance to ISTS)

a) Transmission line

- Solar Park Ph-II – Sankhari 400kV D/c
- LILO of 400KV D/c Mundra(APL) – Zerda line at Solar Park Ph-II
- LILO of both circuits of 220KV D/c Deodhar – Tharad line at Solar Park Ph-II

b) Substation

- Establishment of 400/220KV, 2x315 MVA Substation at Solar Park Ph-II (5x100 MVA, 66/220kV)
- 1x150 MVAR, 420kV Controlled Bus Reactor (TCR) at Solar Park-II

Annexure 5-C

Gujarat Inter-State strengthening requirements

Transmission line

- Bachau (PG)- Solar Park-II (GETCO) 400kV D/c (High Cap/Quad)
- Solar Park-II (GETCO) – Udaipur 400kV D/c (High Cap/Quad)
- Solar Park-II (GETCO)– Chittorgarh 400kV D/c (High Cap/Quad)

Annexure 5-D

Gujarat Intra State strengthening requirements (Transmission strengthening within state for conveyance to ISTS)

a) **Transmission line**

- Vadavi – Chatral 220kV D/c
- Radhanpur- Sankhari 220kV D/c (AL-59)
- Amreli- Vartej 220kV D/c
- Dharangdhara – Bala 220kV D/c
- Chorania- Salejada 220kV D/c
- Sarla- Chorania 220kV (AL-59) D/c
- LILO of 220kV Bala –Dhanki at Adalsar
- Nanikhakhar- Adani (Mundra) 220kV 2nd D/c (or reconductoring of existing line to AL59/High capacity in case of space constraints)
- ***Varsana – Bhachau – Radhanpur 220 kV D/c (AAAC Moose) (Earlier part of the system proposed in DPR by GETCO)***

b) **Substation**

- Installation of 3rd 400/220kV, 1x315 MVA transformer at APL-Mundra
- Installation of 1x50/1x25 MVAR Bus reactors each at 220kV Mobpaneli, Bhatia, Nakhatama, Bachau, Deodhar - GETCO S/s

Broad Estimated Cost : Rs.782 Cr (Rs 602 Cr +Rs 180 Cr) (Inclusive of cost of elements in Annex 5-B)

Annexure 6-A

Maharashtra Inter-State strengthening requirements

a) Substation

- Up gradation of 400kV Kolhapur(PG) & Narendra (SR) substations at 765kV level to facilitate charging of Narendra- Kolhapur D/c line at 765kV level
- Establishment of 2x1500 MVA, 765/400kV transformation capacity at Kolhapur(PG) and Narendra(SR)
- 1x240 MVAR,765kV Bus reactor each at Kolhapur & Narendra S/s

Annexure 6-B

Maharashtra Transmission strengthening within state for conveyance to ISTS

a) Transmission line

- Valve – Dhule (D-III) 220kV D/c
- Donidiacha- Dhule/Dhule(New) 220kV D/c (2nd/1st)
- Jath – Ghatnandare 220kV D/c
- Bhalwani – Malinagar 220kV line
- Ahmadnagar- Bhenda 220kV D/c
- Satara – Lonand 220kV D/c (High Cap)
- Chinchwad-Chakan 220kV D/c (2nd)
- Chinchwad- Urse 220kV line (2nd)
- LILO of 220kV Chinchwad- Theur line at Parvati
- LILO of 220kV Kharepatan –Pawas line at Oni
- LILO of 220kV Karad- K-III & K 1&2 at Malharpeth
- LILO of 220kV Jath –Mhaisal at Alkud may be avoided in order to restrict loading on 220kV system. In case needed wind farm in Jath complex may directly be integrated with Alkud 220kV on radial feed
- Shirala-Peth 132kV D/c (2nd) - upgradation of Shirala S/s to 220kV level
- Talebazar- Kharepatan 132kV line
- Nandurbar- Dondaicha (D-1) 132kV line
- Pachpatta-Nasik 132kV D/c
- Dindori- Ozar 132kV D/c

b) Substation

- Augmentation of 220/132kV transformation capacity by 1x160 MVA (2nd) at Bhenda & Peth
- Augmentation of 220/132kV transformation capacity by 1x160 MVA (4th) at Sholapur
- Installation of 1x50/1x25 MVAR Bus reactors at 220kV Dondaicha/Dhule (MSETCL) S/s
- Installation of 1x150 MVAR, 420kV Controlled Bus reactors (TCR) at 400kV Alkud (MSETCL) S/s

Broad Estimated Cost : Rs. 511 Cr

Annexure 7-A

- **Rajasthan Intra State Transmission Strengthening [DPR]**

  - 400/220kV, 3x500 MVA and 220/132kV, 3x160 MVA Pooling Substation GSS at Ramgarh (Jaisalmer) alongwith 400kV, 1x125 MVAR 400kV Shunt Reactor (Bus type) and 2x50 MVAR Shunt Reactor (line type) for 400kV D/C Ramgarh-Bhadla line
  - 400/220kV, 3x315 MVA and 220/132kV, 3x160 MVA Pooling Substation GSS at Bhadla (Jodhpur) alongwith 400kV, 1x125 MVAR, 400kV Shunt Reactor (Bus type) and 4x50 MVAR, 400kV Shunt Reactor (line type) for Bhadla ends of 400kV D/C Bhadla-Bikaner line, 400kV LILO Jodhpur-Merta at Bhadra line and 400kV D/C Ramgarh-Bhadla line.
  - Augmentation of 400kV GSS Akal by installation of 400/220 kV, 1x500 MVA Transformer along with 400kV, 1x125 MVAR and 400kV, 2x50 MVAR Shunt Reactor (line type) for proposed 400kV Akal-Jodhpur (New) line.
  - 400kV Interconnecting Lines
    a. 400kV D/C Ramgarh (Jaisalmer)-Akal (Jaisalmer) line (Twin Moose).
    b. 400kV D/C Ramgarh-Bhadla line (Twin Moose)
    c. 400kV D/C Bhadla-Bikaner line (Quad Moose).
    d. 400kV D/C line from 400/220kV Pooling Station Bhadla to LILO point at 400kV S/C Jodhpur-Merta line (Twin Moose)
    e. 400kV D/C Akal-Jodhpur (New) line (Quad Moose).
  - 220kV GSS at Bap and associated lines.
    a. 220/132kV, 2x160 MVA & 132/33kV, 2x40/50 MVA GSS at Bap (Distt. Jodhpur)
    b. LILO of 220kV Barsingsar LTPS-Phalodi line at Bap
    c. 220kV D/C Bap-Bhadla line
  - 220kV GSS at Kanasar and associated lines:
    a. 220/132kV, 2x160 MVA & 132/33kV 2x40/50 MVA GSS at Kanasar (Distt. Jodhpur)
    b. 220kV D/C Kanasar-Bhadla line
    c. LILO of 132kV PS1-PS2 Line at proposed 220kV GSS at Kanasar
    d. LILO of 132kV PS2-PS3 Line at proposed 220kV GSS at Kanasar

- Up-gradation of PS No.2 to 132kV Grid Substation with 132/33kV, 2x20/25 MVA Transformers with associated 132kV line
- Up-gradation of PS No.3 to 132kV Grid Substation with 132/33kV, 2x20/25 MVA Transformers.
- Charging of 132kV line from PS_No.5 to PS_No.1 on 132kV Voltage level via 132kV PS _No.2 GSS and 132kV PS_ No.3 GSS & PS_No.4 GSS
- Up-gradation of PS No.4 to 132kV Grid Substation with 132/33kV, 2x20/25 MVA Transformers.

Broad Estimated Cost : Rs 2419 Cr*

** Excluding elements identified towards strengthening within state for conveyance to ISTS transfer*

➢ **Supplementary Transmission scheme**

- 400 kV GSS Jaisalmer-2 (location to be decided at a distance 30-50 kms from 400 kV Akal GSS) along with following transmission system
  a. 2x500 MVA 400/220 kV GSS at Jaisalmer
  a. 400 kV D/c Jaisalmer-2 -Barmer line
  b. 400 kV S/c Akal(1)- Jaisalmer-2 line
  c 1x125 MVAR, 400 kV bus type reactor at proposed 400 kV GSS Jaisalmer-2
  d 9 Nos. of 220 kV feeder bays at proposed 00 kV GSS Jaisalmer-2

- 220 KV GSS at Badisid (near Bap) (Jodhpur Distt.)
  a. 220/132 KV, 1x160 MVA GSS at Badisid
  b. 220 KV D/c Badisid-Bap (U/C 220 KV GSS) line
  c. 220 KV D/c Badisid-Aau (Propose 220 KV GSS) line
  d 132/33, 1x20/25 MVA transformers at proposed 220 KV GSS Badisid
  e Additional 2 Nos. of 220 KV feeder bay , 6 Nos. of 132 KV feeder bays and 6 Nos. of 33 KV feeder bays for Wind /Solar developers
  f. 2 nos. of 1 x20/25 MVA,132/33 KV GSS along with 25 kM 132 kV 2xD/C lines (to be identified later) with additional 2 Nos. of 132 KV feeder bays and 4 Nos 33 KV feeder bays at each new 132 KV GSS for Wind/ Solar developers

- 220 KV GSS at Aau (New loc.) (Jodhpur Distt)
  a. 2201132 KV, 1x160 MVA GSS at Aau
  b 220 KV D/C Aau-Bailwasia (U/C 2 0 KV GSS) line

c 132/33, 1x20/25 MVA transformers at pro osed 220 KV GSS Aau

d. LILO of existing 132 kV S/c Aau (132 KV GSS)-Phalodi line at proposed 220 KV GSS Aau

e Additional 2 Nos of 220 KV feeder bays, 6 Nos. of 132 KV feeder bays and 6 Nos. of 33 KV feeder bays for Wind/ Solar developers

f. 2 nos. of 1 x20/25 MVA,132/33 KV GSS along with 25 kM 132 kV 2xD/C lines (to be identified later) with additional 2 Nos. of 132 KV feeder bays and 4 Nos. of 33 KV feeder bays at each new 132 KV GSS for Wind / Solar developer

- 220 KV GSS at PS_1 (New location other th n PHED s/s) /Bajju (New location) (Bikaner Distt.)
  a. 220/132 KV, 1x160 MVA GSS at PS_1/Bajju
  b 220 KV D/C PS_11 Bajju – Bhadla (U/C 400 KV GSS) line
  c. 132/33. 1x20/25 MVA transformers at pr posed 220 KV GSS PS_1/Bajju
  d. Additional 2 Nos of 220 KV feeder bay J 6 Nos of 132 KV feeder bays and 6 Nos. of 33 KV feeder bays for Wind I Solar developers
  e. LILO of existing 132 KV S/C PS1. -Bajju line at proposed 220 KV GSS PS_1/ Bajju
  f. 2 nos. of 1 x20/25 MVA.132/33 KV GSS along with 25 kM 132 kV 2xD/C lines (to be identified later) with additional 2 Nos. of 132 KV feeder bays and 4 Nos. of 33 KV feeder bays at each new 132 KV GSS for Wind/Solar developers

- 220 KV GSS at Ramdev Nagar (Near Phalodi) (Jodhpur Distt.)
  a. 220/132kV. 1x160 MVA GSS at Ramdev Nagar
  b LILO of one circuit of U/C 220 K D/C Dechu-Phalodi line at .proposed 220 KV GSS Ramdev Nagar
  c. 132/33 1x20/25 MVA transformers at proposed 220 KV GSS Ramdev Nagar Additional 2 Nos. of 220 KV feeder bay, 6 Nos of 132 KV feeder bays and 6 Nos. of 33 KV feeder bays for Wind /Solar developers
  d. 2 nos of 1 x20/25 MVA,132/33 KV GS along with 25 km 132 kV 2xD/C lines (to be identified later) with additional 2 Nos. of 132 KV feeder bays and 4 Nos. of 33 KV feeder bays at each new 132 KV GSS for Wind/Solar developers

- 220 KV GSS Chatrail (Jaisalmer Distt.)
  a. 220/132 KV, 1 x160 MVA GSS at Chatrail
    a 220 KV D/C Chatrail-Ramgarh (U C 400 KV GSS) line

b 132/33 KV, 1 x20/25 MVA GSS at Chatrail

c Additional 2 Nos of 220 KV feeder bay . 6 Nos. of 132 KV feeder bays and 6 Nos. of 33 KV feeder bays for Wind/Solar developers

d 2 nos. of 1x20/25 MVA.132/33KV GS along with 25 km 132 kV 2xD/C lines (to be identified later) with additional 2 Nos of 132 KV feeder bays and 4 Nos. of 33 KV feeder bays at each new 132 KV GSS for Wind/ Solar developers

- 220 KV GSS at Pokaran (New loc.) (Jaisalmer Distt.)
  - a 220/132 KV, 1x160 MVA GSS at Pokara
  - b. LILO of both the ckts of U/C 220 V D/C Ramgarh GTPP - Dechu line at Pokaran
  - c. 132/33. 1x20/25 MVA transformers at proposed 220 KV GSS Pokaran
  - d L1LO of existing 132 KV S/c Chandan-Pokaran line at proposed 220 KV GSS Pokaran
  - e. Additional 2 Nos. of 220 KV feeder bay, 6 Nos. of 132 KV feeder bays and 6 Nos. of 33 KV feeder bays for Wind/Solar developers
  - f 2 nos. of 1x20/25 MVA,132/33 KV GS along with 25 kM 132 kV 2xD/C lines (to be identified later) with additional 2 Nos. of 132 KV feeder bays and 4 Nos. of 33 KV feeder bays at each new 132 KV GSS for Wind / Solar developers

- 220 KV GSS at Kolayat (New loc.) (Bikaner Distt.)
  - a. 220/132 KV. 1x160 MVA GSS at Kolayat
  - b. 15 Km 220 KV D/C Gajner (U/C 220 KV GS)-Kolayat line
  - c 132/33, 1 x20/25 MVA transformers at proposed 220 KV GSS Kolayat
  - d. LILO of existing 132 KVS/C Kolayat-Baju line at proposed 220 KV GSS Kolayat
  - e. Additional 2 Nos of 220 KV feeder bays. 6 Nos. of 132 KV feeder bays and 6 Nos. of 33 KV feeder bays for Wind / Solar developers
  - f. 2 nos of 1x20/25 MVA.132/33 KV GSS along with 25 kM 132 kV 2xD/C lines (to be identified later) with additional 2 Nos of 132 KV feeder bays and 4 Nos. of 33 KV feeder b ys at each new 132 KV GSS for Wind I Solar developers

Broad Estimated Cost : Rs 1398 Cr

Annexure 7-B

Rajasthan Inter-State strengthening requirements

a) Transmission Line

- Jodhpur(New) – Ajmer(New) 765kV D/c (along with 2x240 MVAR Switchable line reactors at each end)
- Ajmer(New) – Suratgarh 765kV D/c (along with 2x330 MVAR Switchable line reactors at each end)
- Suratgarh – Moga 765kV D/c (along with 2x240 MVAR Switchable line reactors at each end)
- Kankroli- Ajmer (New) 400kV D/c (along with 2x50 MVAR line reactors at each end)
- Kankroli- Udaipur 400kV D/c
- Suratgarh(existing)- Suratgarh (New) 400kV D/c
- Ajmer(existing)- Ajmer (New) 400kV D/c

b) Substation

- Establishment of 765/400kV, 2x1500 MVA Substation at Jodhpur
- Establishment of 765/400kV, 2x1500 MVA Substation at Ajmer (New)
- Establishment of 765/400kV, 2x1500 MVA Substation at Suratgarh (New)
- Installation of 765/400kV, 1x1500 MVA & 400/220kV, 1x500 MVA transformer at Moga
- 1x240 MVAR.765kV Bus reactor at Jodhpur & Ajmer (New)

Annexure 7-C

Rajasthan Transmission strengthening within state for conveyance to ISTS

a) Transmission Line

- Bhiwadi – Rewari 220kV D/c
- Bhinmal – Sirohi 220kV D/c line
- Amarsagar –Phalodi 220kV D/c line
- Augmentation at 400kV GSS Barmer (***Earlier part of the system proposed in DPR by RRVPNL)***
    a. 1x125 MVAR, 400kV Shunt Reactor (Bus type) at 400kV GSS Barmer.
    b. 400kV bays for 400kV D/C Barmer-Bhinmal (PG) line
- Augmentation at 400kV GSS Bikaner (***Earlier part of the system proposed in DPR by RRVPNL)***
    a 400kV bays for 400kV D/C Bhadla-Bikaner line and 400kV D/C Bikaner-Sikar (PGCIL) line at Bikaner ends of line
    b. 1x125 MVAR, 400kV Bus reactor at 400kV GSS Bikaner
- Augmentation of 400kV GSS Jodhpur (New) (***Earlier part of the system proposed in DPR by RRVPNL)***
    a 2x50 MVAR, 400kV Shunt Reactor (line type) at 400kV GSS Jodhpur (New) for 400kV D/C Akal-Jodhpur (New) line
    b. 400kV bay at Jodhpur (New) for LILO of one ckt. of 400kV D/C Raj West LTPS-Jodhpur line.
- 400kV D/C Bikaner-Sikar (PGCIL) line (Twin Moose) (***Earlier part of the system proposed in DPR by RRVPNL)***
- 400kV D/C Barmer-Bhinmal (PGCIL) line (Twin Moose) (***Earlier part of the system proposed in DPR by RRVPNL)***
- LILO of one circuit of 400kV D/C Raj West-Jodhpur line at 400kV GSS Jodhpur (New) (Twin Moose) (***Earlier part of the system proposed in DPR by RRVPNL)***

b) Substation

- Installation of 220/132kV, 2x160MVA transformer at Jodhpur, Chittorgarh & Jaipur.

- Installation of 220/132kV, 1x160MVA transformer at Sirohi, Nimbhrhera & Alwar, Bilara, Bhilwara, Beawar & Banswara
- Installation of 220/132kV, 1x200MVA transformer at Udaipur & Hindaun
- Installation of 220/132kV, 2x200MVA transformer at Jaipur
- Installation of 1x150 MVAR, 420kV Controlled Bus reactor (TCR) at Bhadla, Akal, Bikaner & Jaisalmer
- Installation of 1x125 MVAR, 420kV Bus reactor at Jaipur, Merta, Ramgarh(2nd), Chittorgarh & Bhilwara New
- Installation of 1x25/50 MVAR, 220kV Bus reactor each at Dechu and Pokran

Broad Estimated Cost : Rs.1079 Cr (Rs 563 Cr +Rs 516 Cr)

Annexure 8-A

Himachal Pradesh Intra State transmission system Proposed by HP / ADB

- 220/132/66kV, 1x80/100MVA Sub station at Sunda
- 66kV Andhra PH to Sunda HEP D/c line
- 132kV Tangnu Romai HEP – Sunda HEP D/c line
- 132kV Rupin HEP – Sunda HEP D/c line
- 22/66kV GIS S/s at Nirmand (Bagipul)
- 66kV Bagipul– Kotla D/c line
- Augmentation of 22/66kV & 66/220kV transformer at Kotla
- 33/132kV, 2x31.5MVA S/s at Chambi
- LILO of 132kV Dehra-Kangra S/c at Chambi HEP
- 132/220kV, 2x80/100MVA GIS S/s at Chhaur

Broad Estimated Cost : Rs 376 Cr *

** Excluding elements identified towards strengthening within state for conveyance to ISTS transfer*

Annexure 8-B

Himachal Pradesh Transmission strengthening within state for conveyance to ISTS

a) Transmission Line

- Kulhal (Uttranchal) – Giri 132kV D/c line
- Giri – Abdaluapur 132kV D/c line
- Kunihar – Solan 132kV D/c line
- Kunihar – Jutog 132kV D/c line
- 33/220kV, 50/63MVA S/s at Fozal (***Earlier part of the system proposed in DPR by HPTCL)***
- LILO of 220kV Prini-Nalagarh S/c at Fozal HEP (***Earlier part of the system proposed in DPR by HPTCL)***

b) Substation

- Installation of 2nd 220/132kV, 1X160 MVA transformer each at Giri, Kunihar & Hamirpur S/s

Broad Estimated Cost: Rs 230 Cr

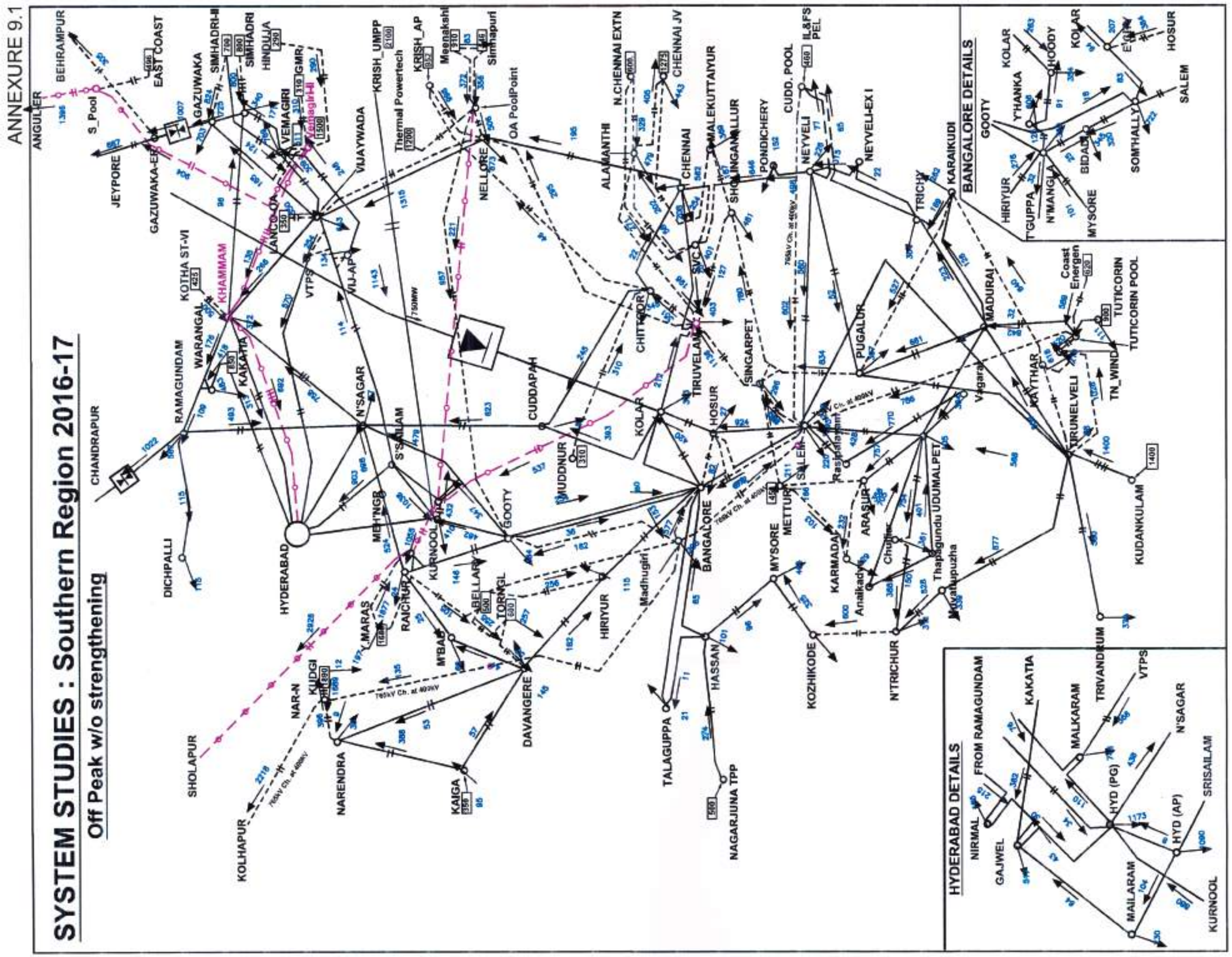
ANNEXURE 9.1
SYSTEM STUDIES : Southern Region 2016-17
Off Peak w/o strengthening
BANGALORE DETAILS
HYDERABAD DETAILS
ANGULER
BEHRAMPUR
S_Pool
EAST COAST
JEYPORE
GAZUWAKA-ER
GAZUWAKA
SIMHADRI-II
SIMHADRI
HINDUJA
VEMAGIRI
GMR
VIJAYWADA
KRISH_UMPP
Thermal Powertech
KRISH_AP
Meenakshi
Simhapuri
OA PoolPoint
NELLORE
N.CHENNAI EXTN
ALAMANTHI
CHENNAI
CHENNAI JV
SHOLINGANALLUR
PONDICHERY
CUDD. POOL
IL&FS PEL
NEYVELI
NEYVELI-EX I
TRICHY
KARAIKUDI
KOTHA ST-VI
KHAMMAM
WARANGAL
RAMAGUNDAM
KAKATIA
CHANDRAPUR
DICHIPALLI
HYDERABAD
N'SAGAR
S'SALAM
CUDDAPAH
MUDDNUR
GOOTY
MEHTNGB
KURNOOL
RAICHUR
BELLARY
TORNGL
M'BAD
MARAS
KUDGI
NAR-N
NARENDRA
KAIGA
DAVANGERE
HIRIYUR
Madhugiri
BANGALORE
KOLAR
HOSUR
CHITTOOR
TIRUVELAM
SVC
SINGARPET
SALEM
METTUR
MYSORE
HASSAN
TALAGUPPA
NAGARJUNA TPP
KOZHIKODE
KARMADA
ARASUR
Anaikadavu
Chulliar
N'TRICHUR
Thapagundu
UDUMALPET
Mavathupuzha
PUGALOR
MADURAI
Coast Energen
TUTICORIN
TUTICORIN POOL
TN_WIND
KAYTHAR
TIRUNELVELI
KUDANKULAM
TRIVANDRUM
SHOLAPUR
KOLHAPUR
765kV Ch. at 400kV
750MW
GOOTY
Y'HANKA
KOLAR
HOODY
HOSUR
SALEM
HIRIYUR
T'GUPPA
N'MANGLA
BIDADI
MYSORE
SOM'HALLY
NIRMAL
FROM RAMAGUNDAM
KAKATIA
MALKARAM
TRIVANDRUM
VTPS
N'SAGAR
SRISAILAM
GAJWEL
HYD (PG)
HYD (AP)
MAILARAM
KURNOOL

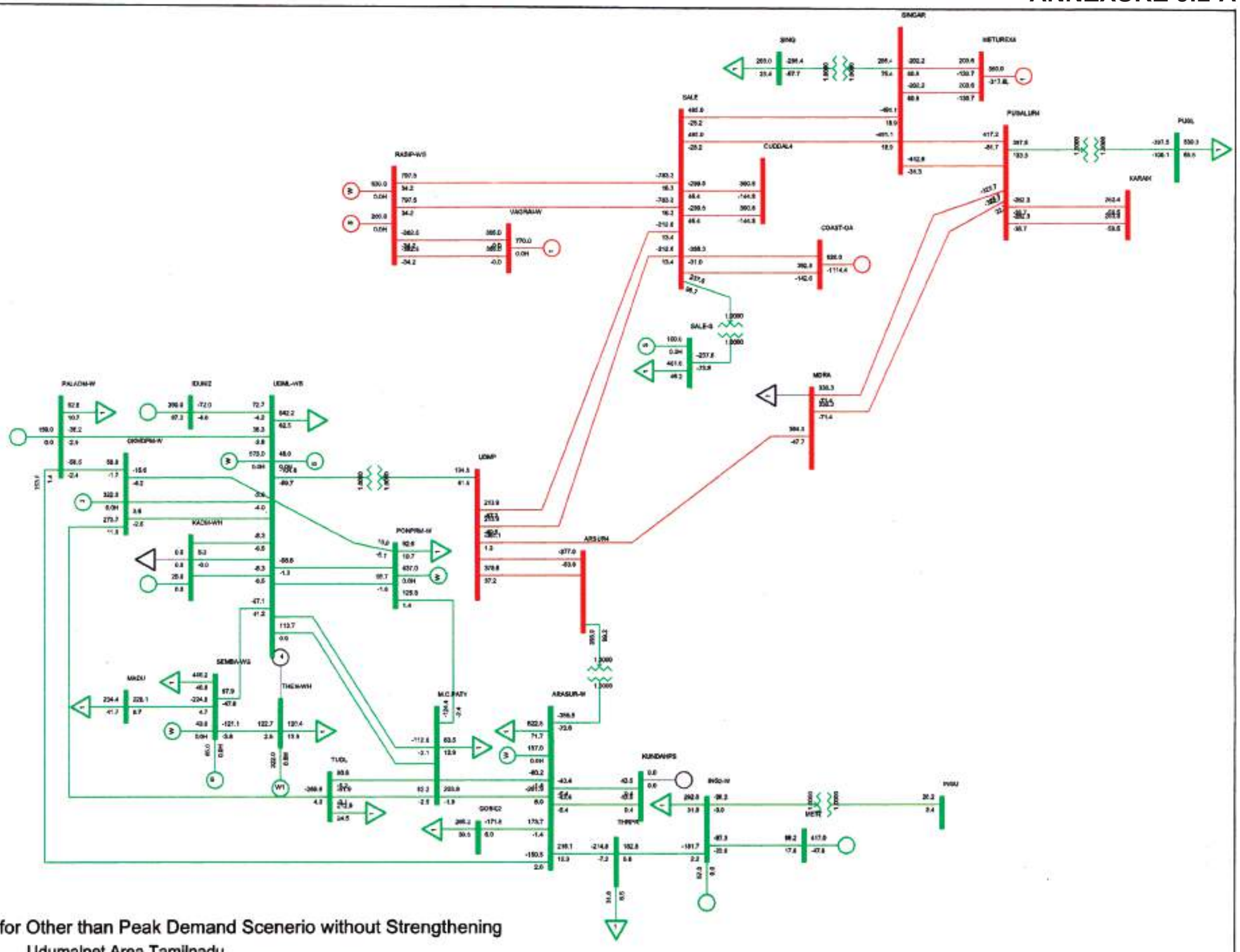

RE Transmission Study for Other than Peak Demand Scenerio without Strengthening

Udumalpet Area Tamilnadu

Bus Voltage - kV/PU
Branch - MW/MVAR
Equipment - MW/MVAR

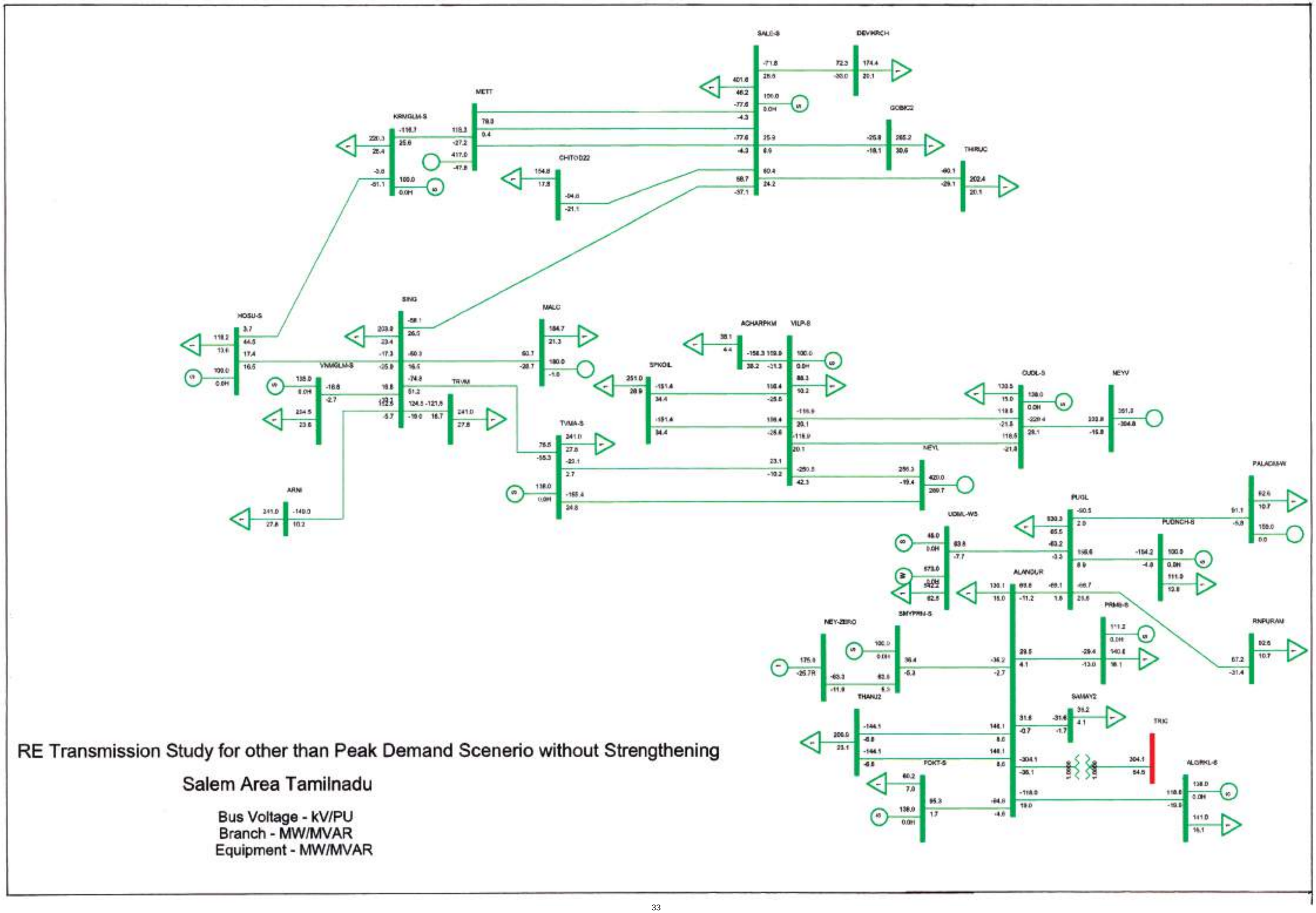

RE Transmission Study for other than Peak Demand Scenerio without Strengthening

Salem Area Tamilnadu

Bus Voltage - kV/PU
Branch - MW/MVAR
Equipment - MW/MVAR

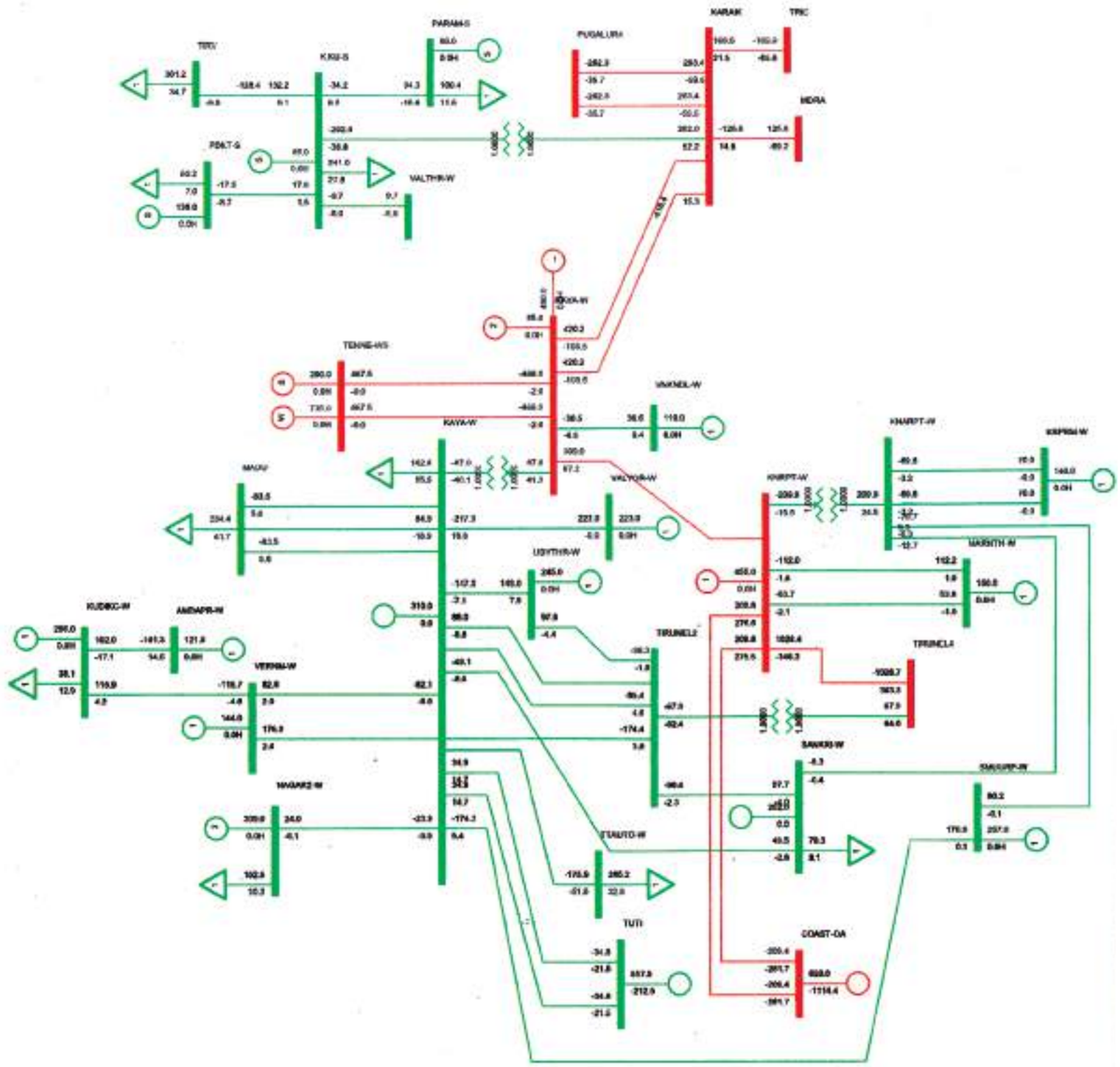

RE Transmission Study for otherthan Peak Demand Scenerio without Strengthening

Thirunelveli Area Tamilnadu

Bus Voltage (kV/PU)
Branch - MW/MVAR
Equipment - MW/MVAR

ANNEXURE 9.2

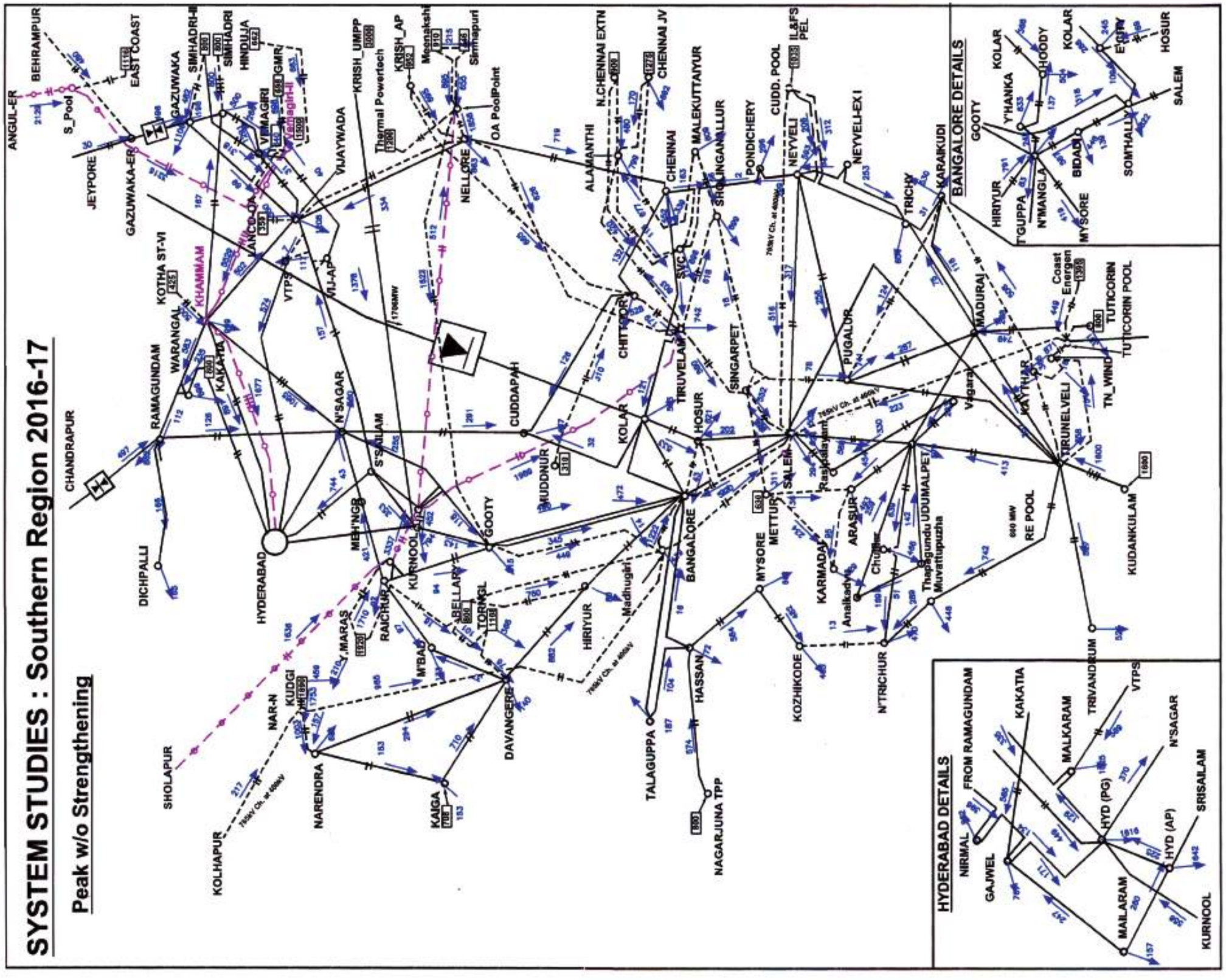
SYSTEM STUDIES : Southern Region 2016-17
Peak w/o Strengthening
BANGALORE DETAILS
HYDERABAD DETAILS
ANGUL-ER
BEHRAMPUR
S_Pool
EAST COAST
JEYPORE
GAZUWAKA-ER
GAZUWAKA
SIMHADRI-II
SIMHADRI
HINDUJA
VIMAGIRI
GMR
KRISH_UMPP
KRISH_AP
Meenakshi
Simhapuri
VIJAYWADA
Thermal Powertech
NELLORE
OA PoolPoint
N.CHENNAI EXTN
ALAMANTHI
CHENNAI
CHENNAI JV
MALEKUTTAIYUR
SHOLINGANALLUR
PONDICHERY
CUDD. POOL
IL&FS PEL
NEYVELI
NEYVELI-EX I
TRICHY
KARAIKUDI
GOOTY
KOLAR
Y'HANKA
HOODY
KOLAR
HOSUR
SALEM
HIRIYUR
T'GUPPA
N'MANGLA
BIDADI
MYSORE
SOM'HALLI
KOTHA ST-VI
KHAMMAM
WARANGAL
RAMAGUNDAM
KAKATIA
VTPS
VLJ-AP
LANCO-OA
N'SAGAR
S'SAILAM
CUDDAPAH
CHITTOOR
KOLAR
TIRUVELAM
SVC
HOSUR
SINGARPET
PUGALOR
MADURAI
Coast Energen
TUTICORIN
TUTICORIN POOL
TN_WIND
TIRUNELVELI
KAYTHAR
Vigara
KUDANKULAM
CHANDRAPUR
DICHPALLI
HYDERABAD
MEH'NGB
GOOTY
MUDDNUR
BANGALORE
SALEM
METTUR
Rasipalayam
ARASUR
KARMADA
Anaikadavu
Chulliar
Thapagundu UDUMALPET
Muvattupuzha
RE POOL
MYSORE
KOZHIKODE
N'TRICHUR
TRIVANDRUM
KURNOOL
RAICHUR
BELLARY
TORNGL
Madhugiri
HIRIYUR
M'BAD
DAVANGERE
TALAGUPPA
HASSAN
NAGARJUNA TPP
SHOLAPUR
KOLHAPUR
NAR-N
KUDGI
NARENDRA
KAIGA
NIRMAL
FROM RAMAGUNDAM
KAKATIA
MALKARAM
TRIVANDRUM
VTPS
N'SAGAR
GAJWEL
HYD (PG)
HYD (AP)
SRISAILAM
MAILARAM
KURNOOL

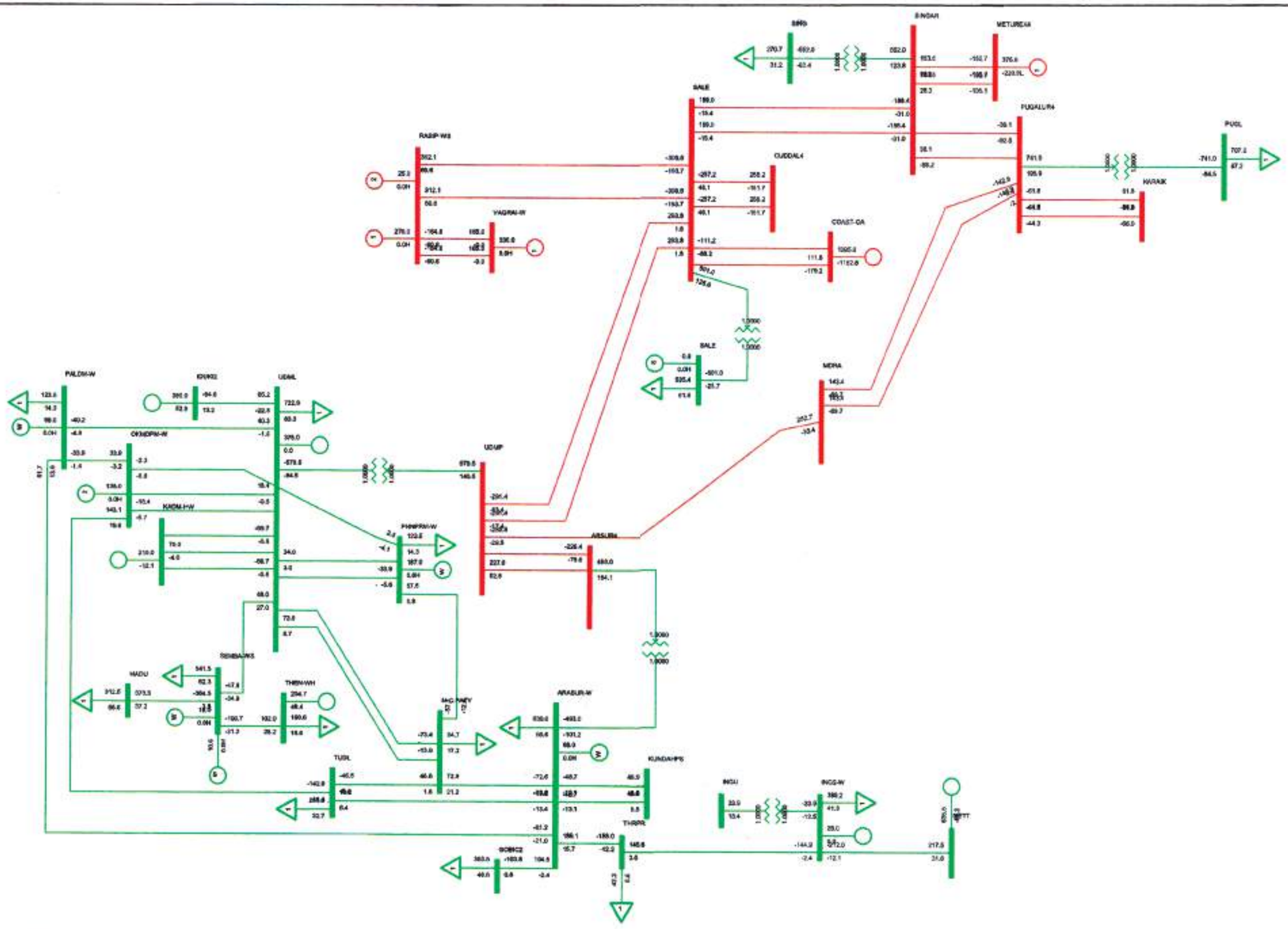

RE Transmission Study for Peak Demand Scenerio without Strengthening

Udumalpet Area

Bus Voltage - kV/PU
Branch - MW/MVAR
Equipment - MW/MVAR

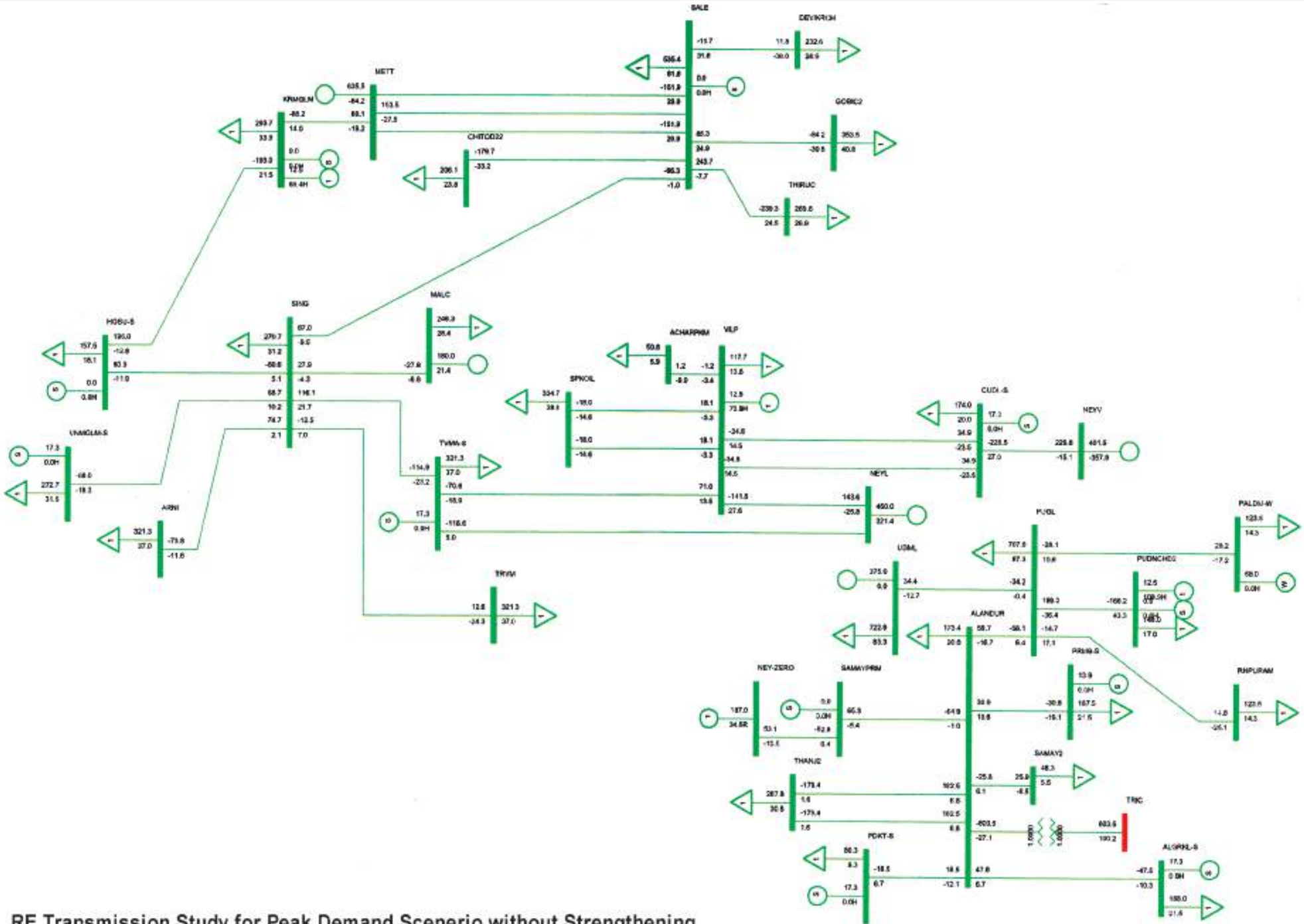

RE Transmission Study for Peak Demand Scenerio without Strengthening
Salem Area Tamilnadu

Equipment - MW/MVAR
Bus Voltage - kV/PU
Branch - MW/MVAR

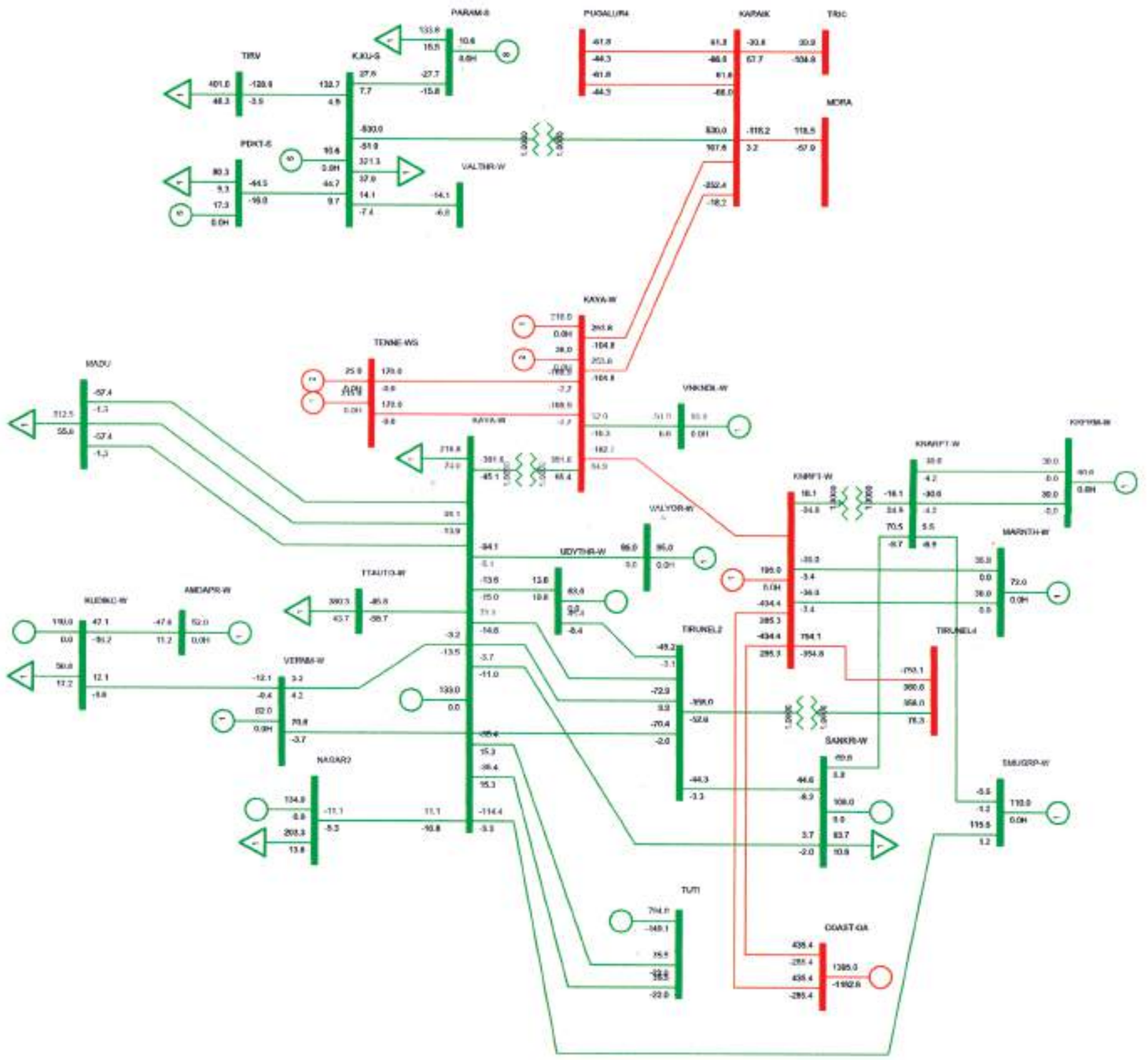

RE Transmission Study for Peak Demand Scenerio without Strengthening

Thirunelveli Area Tamilnadu

Bus Voltage - kV/PU
Branch - MW/MVAR
Equipment - MW/MVAR

SYSTEM STUDIES : Southern Region 2016-17

Off Peak with strengthening

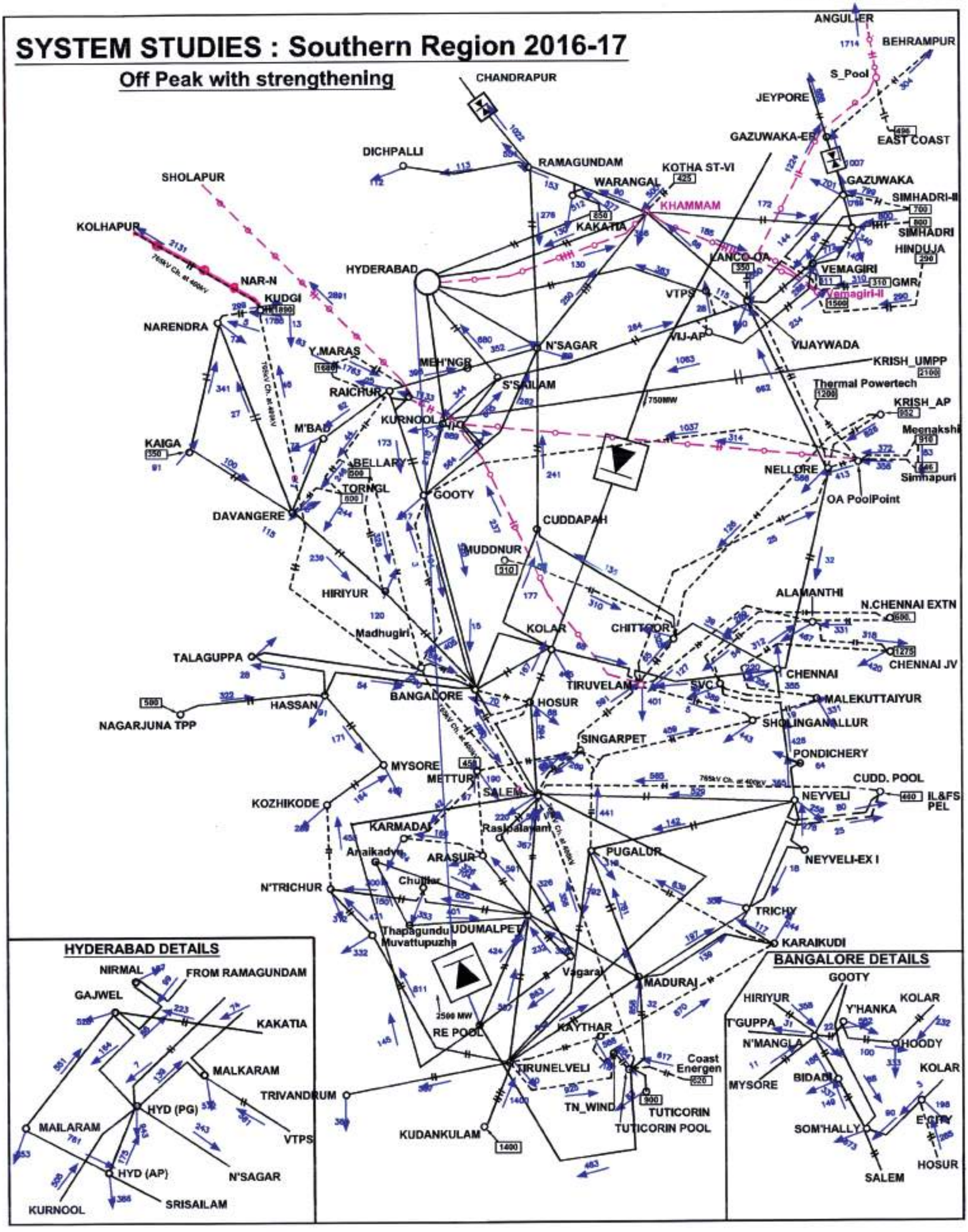

ANNEXURE 9.3

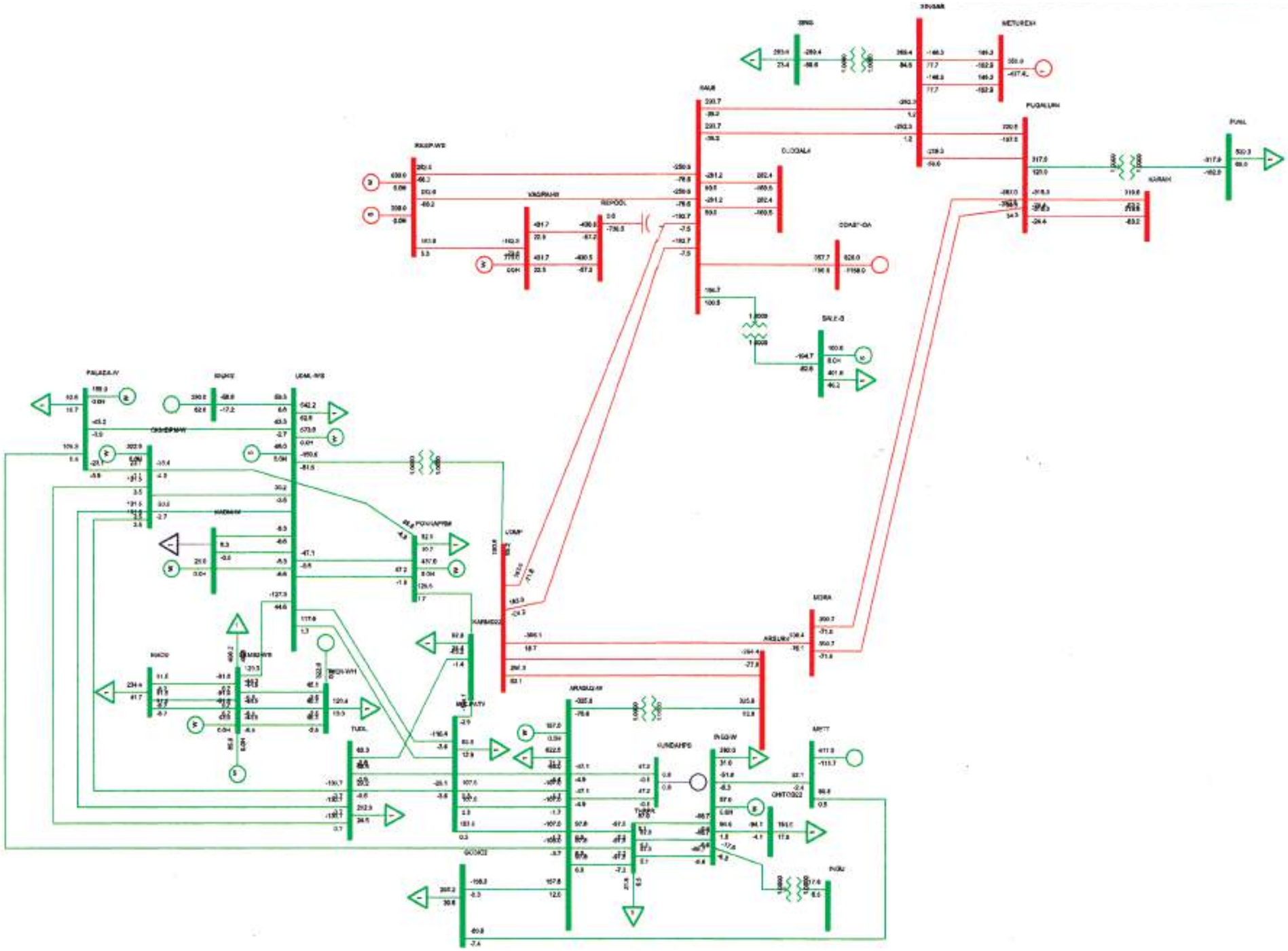

RE Transmission Study for other than Peak Demand Scenerio with Strengthening

Udumalpet Area Tamilnadu

Bus Voltage - kV/PU
Equipment - MW/MVAR
Branch - MW/MVAR

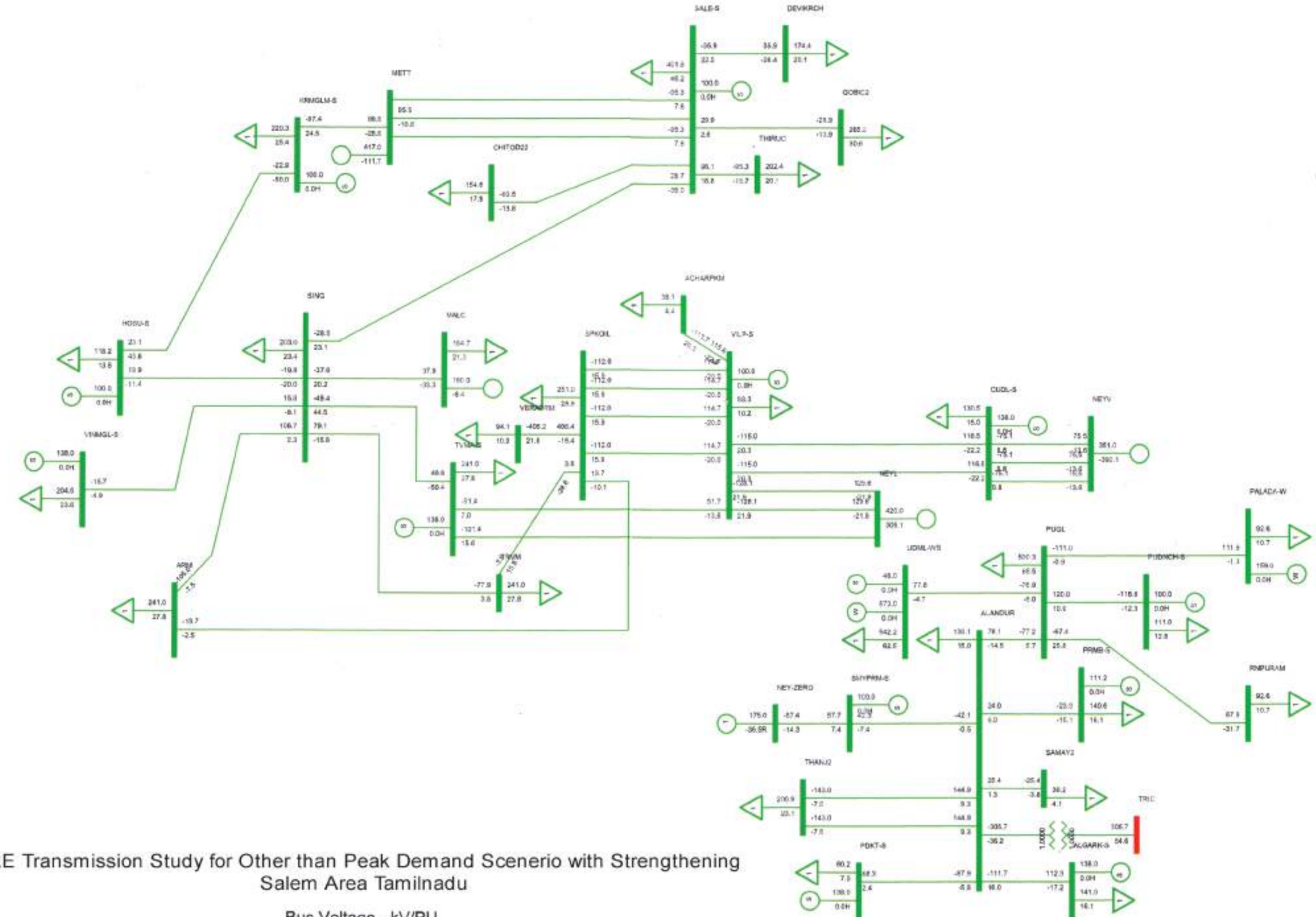

RE Transmission Study for Other than Peak Demand Scenerio with Strengthening
Salem Area Tamilnadu

Bus Voltage - kV/PU
Branch - MW/MVAR
Equipment - MW/MVAR

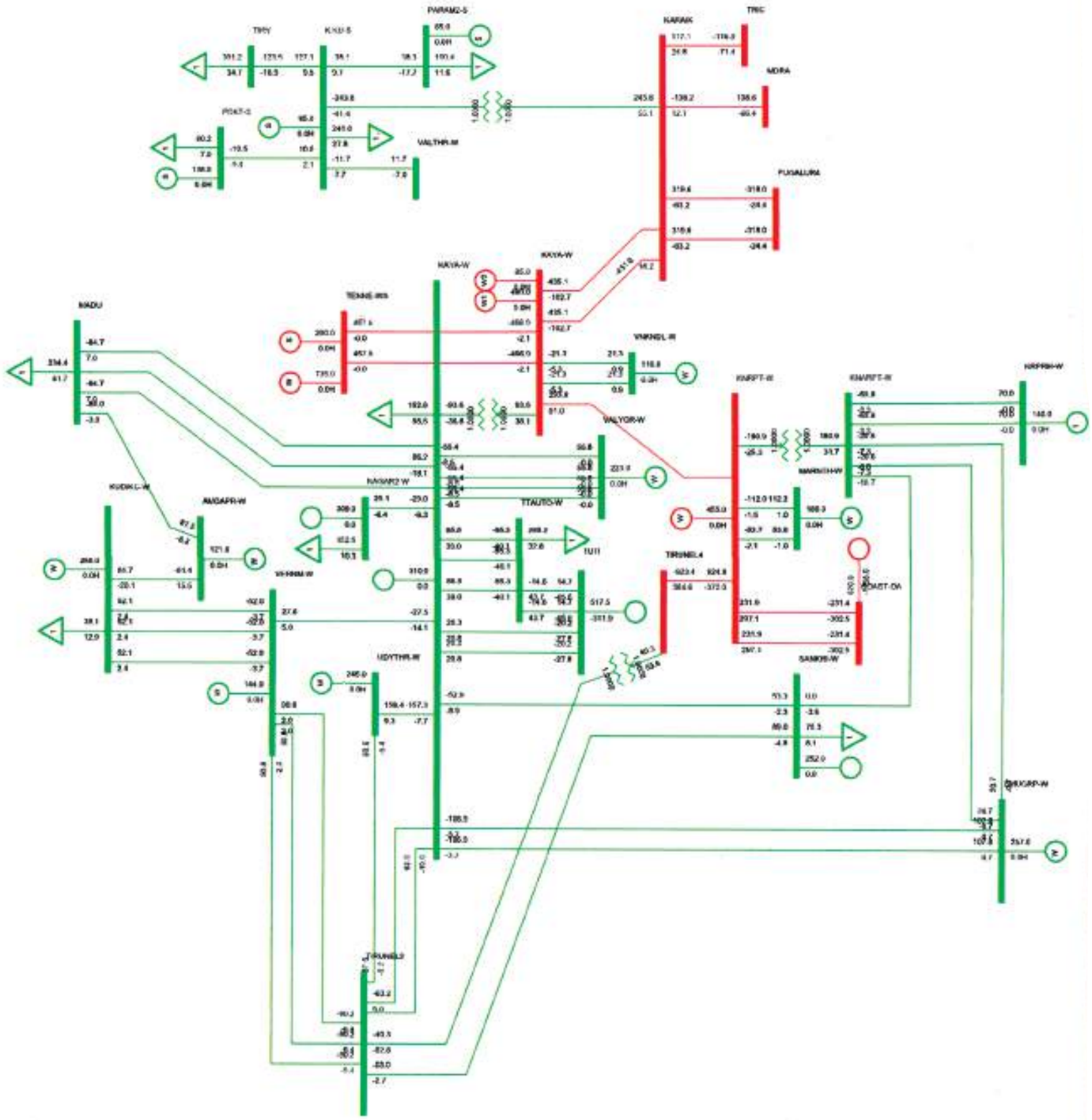

RE Transmission Study for other than Peak Demand Scenerio with Strengthening
Thirunelveli Area Tamilnadu

Bus Voltage - kV/PU
Branch - MW/MVAR
Equipment - MW/MVAR

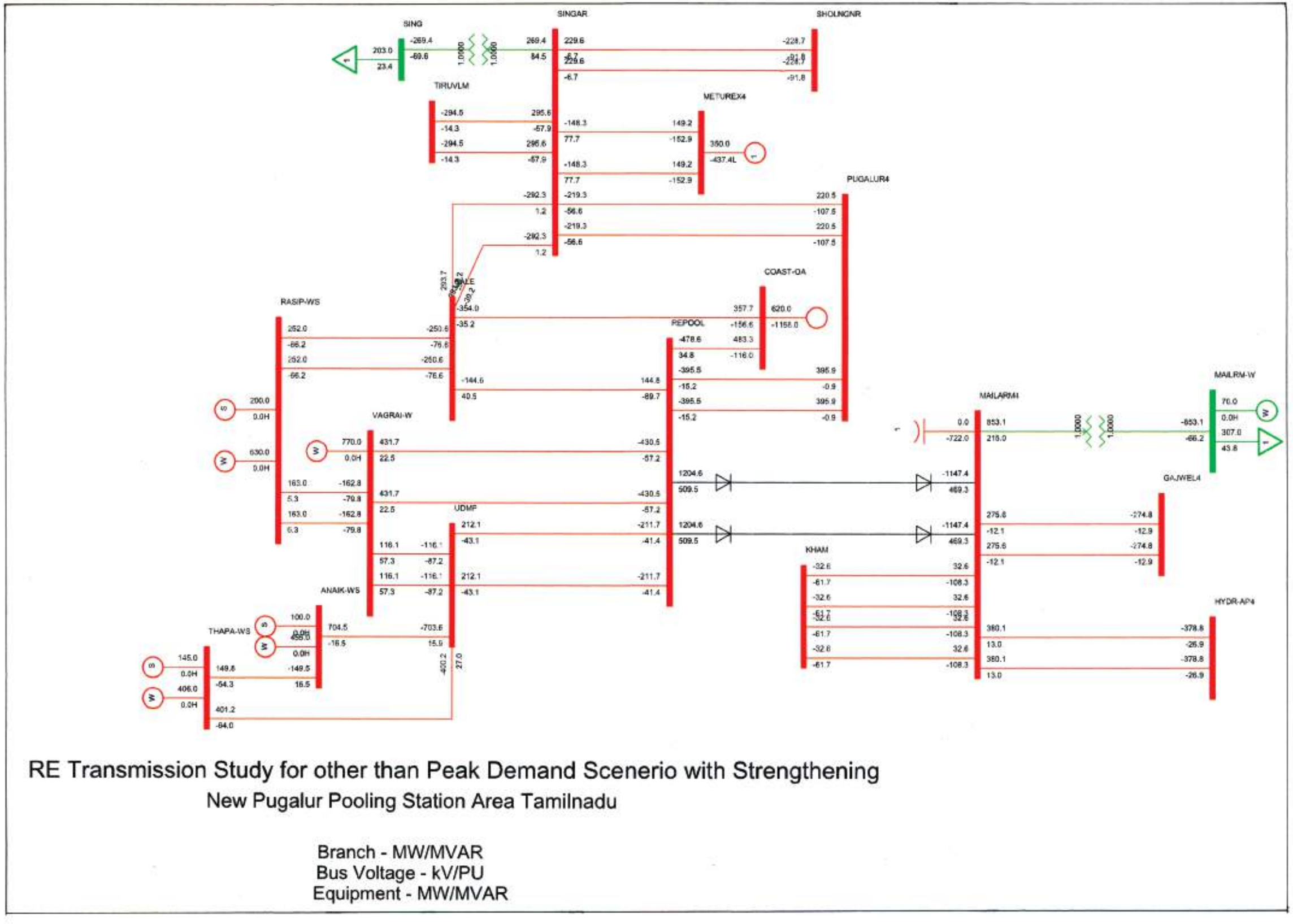

RE Transmission Study for other than Peak Demand Scenerio with Strengthening

New Pugalur Pooling Station Area Tamilnadu

Branch - MW/MVAR
Bus Voltage - kV/PU
Equipment - MW/MVAR

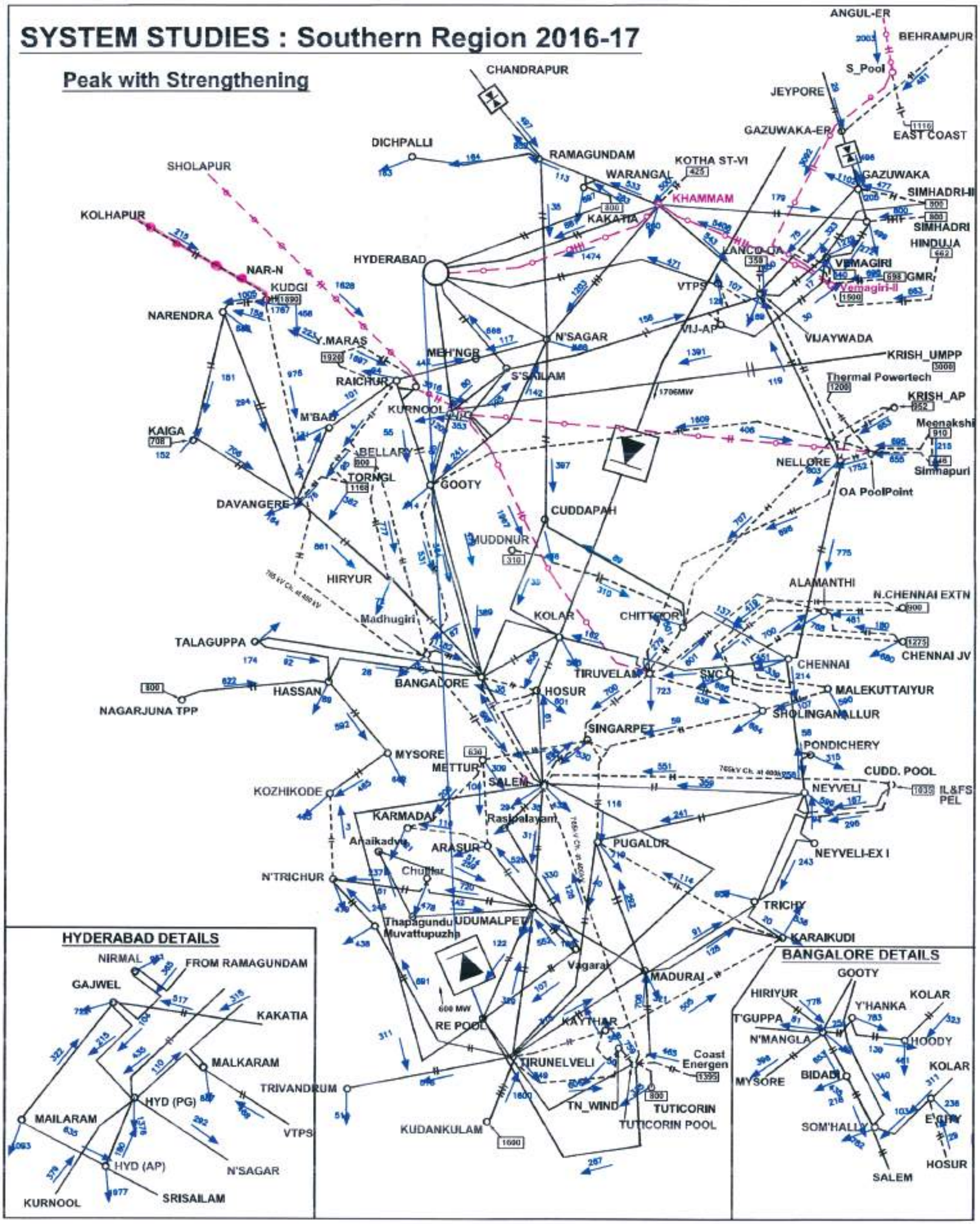
SYSTEM STUDIES : Southern Region 2016-17
Peak with Strengthening
ANGUL-ER
BEHRAMPUR
S_Pool
CHANDRAPUR
JEYPORE
GAZUWAKA-ER
EAST COAST
DICHPALLI
RAMAGUNDAM
KOTHA ST-VI
SHOLAPUR
WARANGAL
GAZUWAKA
SIMHADRI-II
KHAMMAM
KOLHAPUR
KAKATIA
SIMHADRI
HINDUJA
HYDERABAD
LANCO-JA
VEMAGIRI
NAR-N
KUDGI
GMR
VTPS
Yemagiri-II
NARENDRA
VIJ-AP
VIJAYWADA
Y.MARAS
N'SAGAR
KRISH_UMPP
MEH'NGR
S'SAILAM
Thermal Powertech
RAICHUR
KRISH_AP
KURNOOL
M'BAD
Meenakshi
KAIGA
BELLARY
NELLORE
Simhapuri
TORNGL
GOOTY
OA PoolPoint
DAVANGERE
CUDDAPAH
MUDDNUR
HIRYUR
ALAMANTHI
N.CHENNAI EXTN
Madhugiri
KOLAR
CHITTOOR
TALAGUPPA
CHENNAI JV
CHENNAI
TIRUVELAM
SVC
BANGALORE
HOSUR
MALEKUTTAIYUR
HASSAN
NAGARJUNA TPP
SHOLINGANALLUR
SINGARPET
PONDICHERY
MYSORE
METTUR
CUDD. POOL
SALEM
NEYVELI
IL&FS PEL
KOZHIKODE
KARMADAI
Rasipalayam
Anaikadavu
ARASUR
PUGALUR
NEYVELI-EX I
N'TRICHUR
Chullar
TRICHY
Thapagundu
UDUMALPET
Muvattupuzha
KARAIKUDI
Vagarai
MADURAI
RE POOL
KAYTHAR
TIRUNELVELI
Coast Energen
TRIVANDRUM
TN_WIND
TUTICORIN
TUTICORIN POOL
KUDANKULAM
HYDERABAD DETAILS
NIRMAL
FROM RAMAGUNDAM
GAJWEL
KAKATIA
MALKARAM
HYD (PG)
MAILARAM
VTPS
HYD (AP)
N'SAGAR
KURNOOL
SRISAILAM
BANGALORE DETAILS
GOOTY
HIRIYUR
KOLAR
Y'HANKA
T'GUPPA
N'MANGLA
HOODY
MYSORE
BIDADI
KOLAR
SOM'HALLY
E'CITY
HOSUR
SALEM

ANNEXURE 9.4

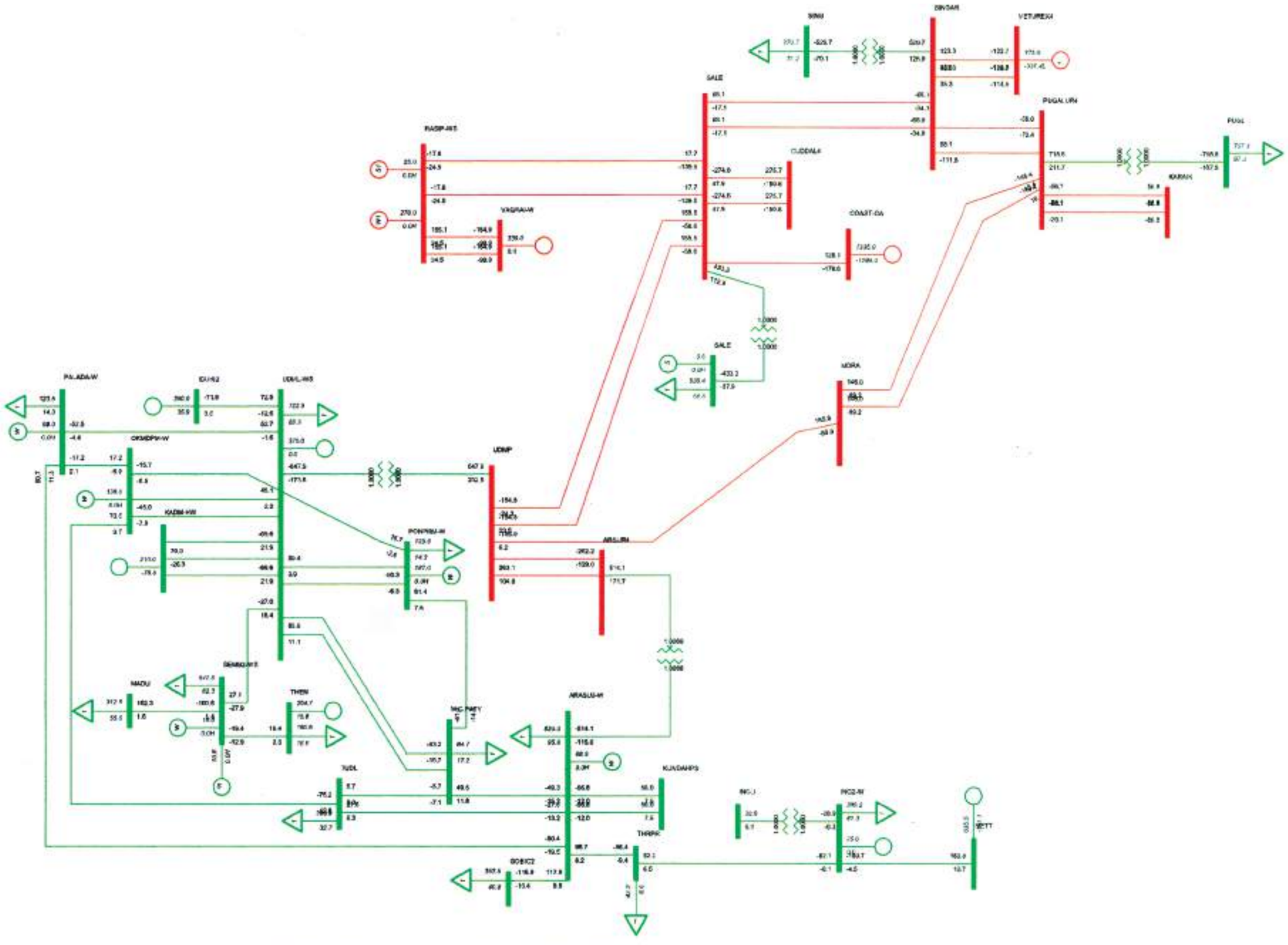

RE Transmission Study for Peak Demand Scenerio with Strengthening

Udumalpet Area

Bus Voltage - kV/PU
Branch - MW/MVAR
Equipment - MW/MVAR

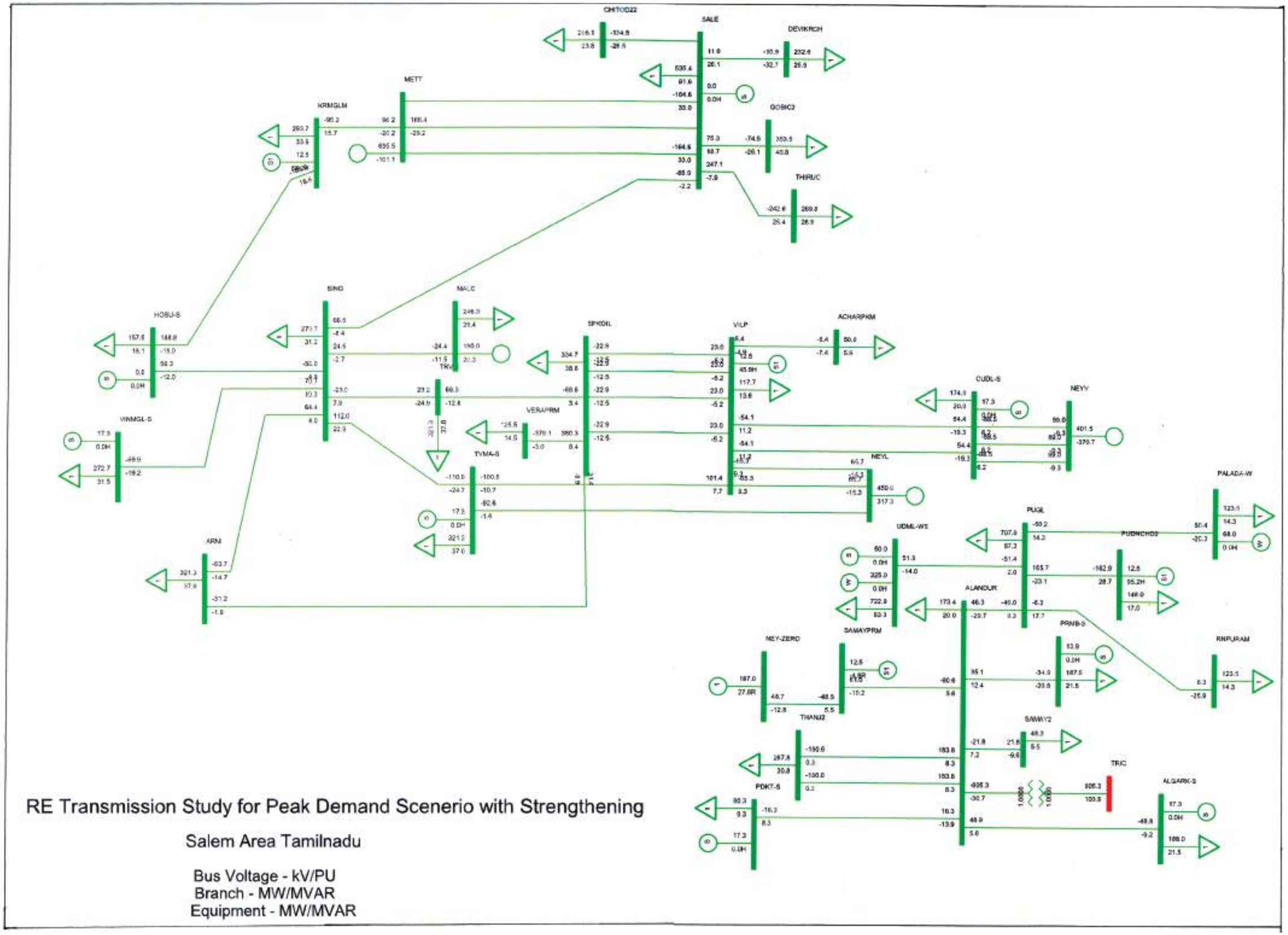

RE Transmission Study for Peak Demand Scenerio with Strengthening

Salem Area Tamilnadu

Bus Voltage - kV/PU
Branch - MW/MVAR
Equipment - MW/MVAR

RE Transmission Study for Peak Demand Scenerio with Strengthening

Thirunveli Area Tamilnadu

Bus Voltage - kV/PU
Branch - MW/MVAR
Equipment - MW/MVAR

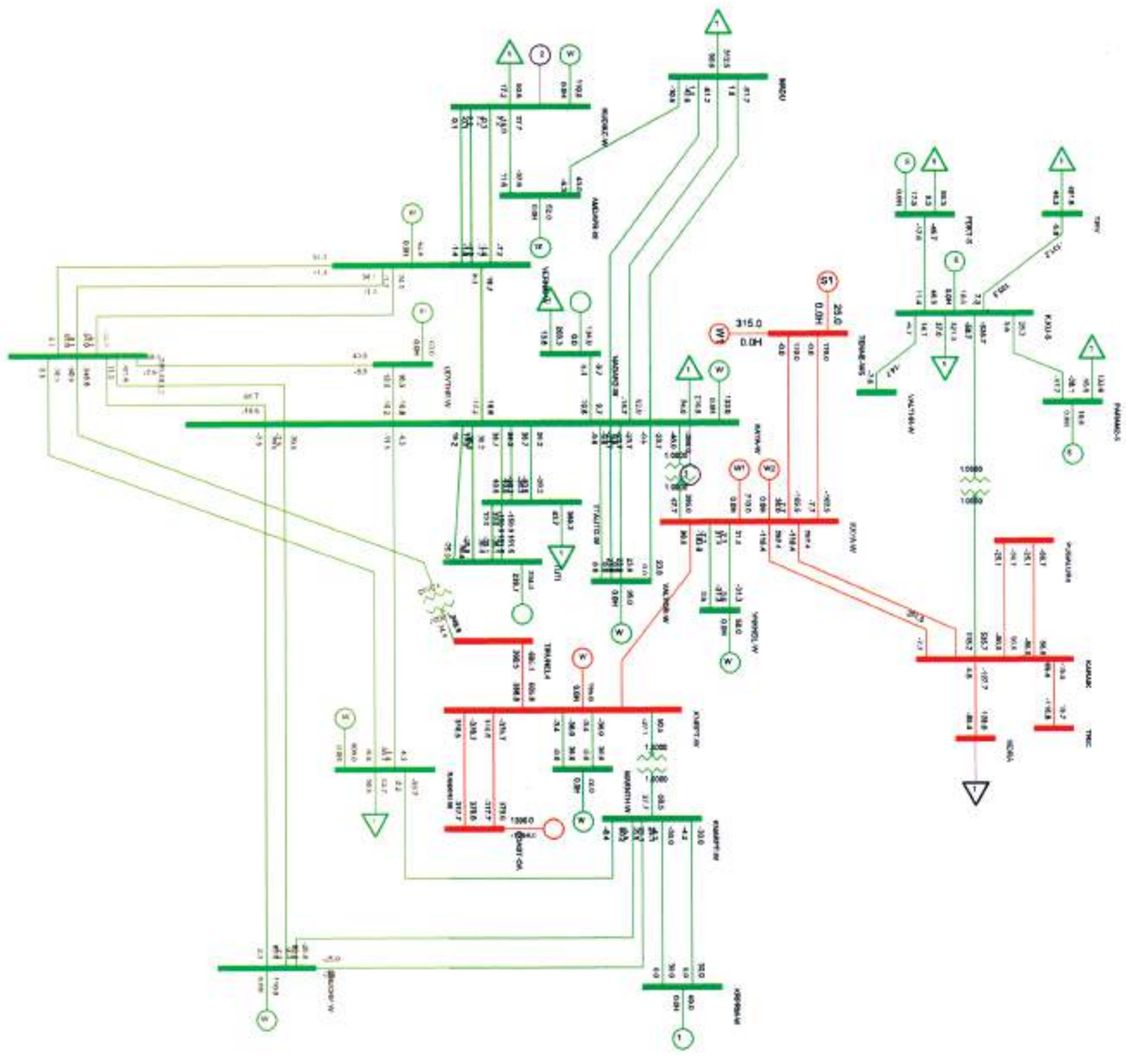

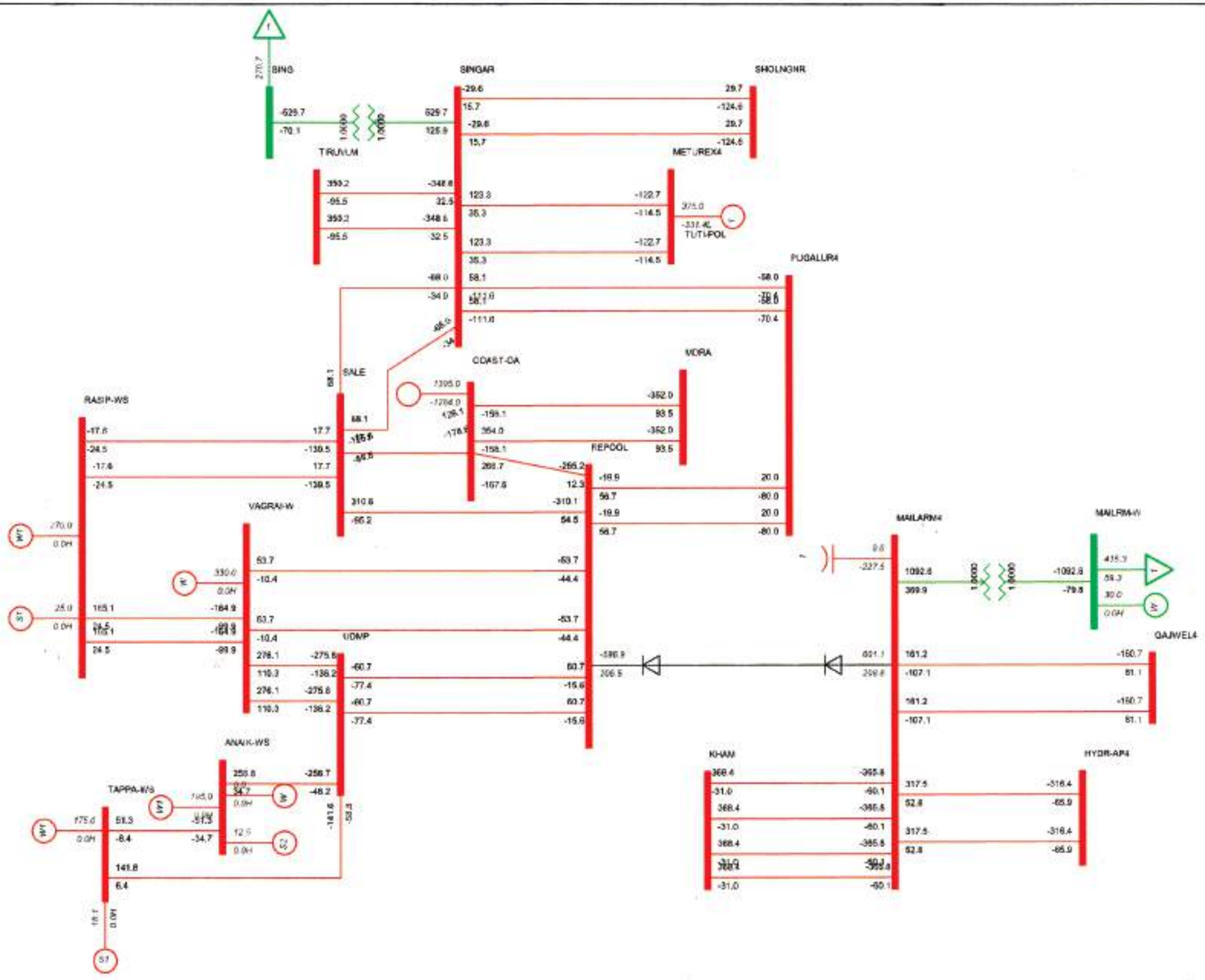

RE Transmission Study for Peak Demand Scenerio with Strengthening

New Pugalur Pooling Station Area Tamilnadu

Bus Voltage - kV/PU
Branch - MW/MVAR
Equipment - MW/MVAR

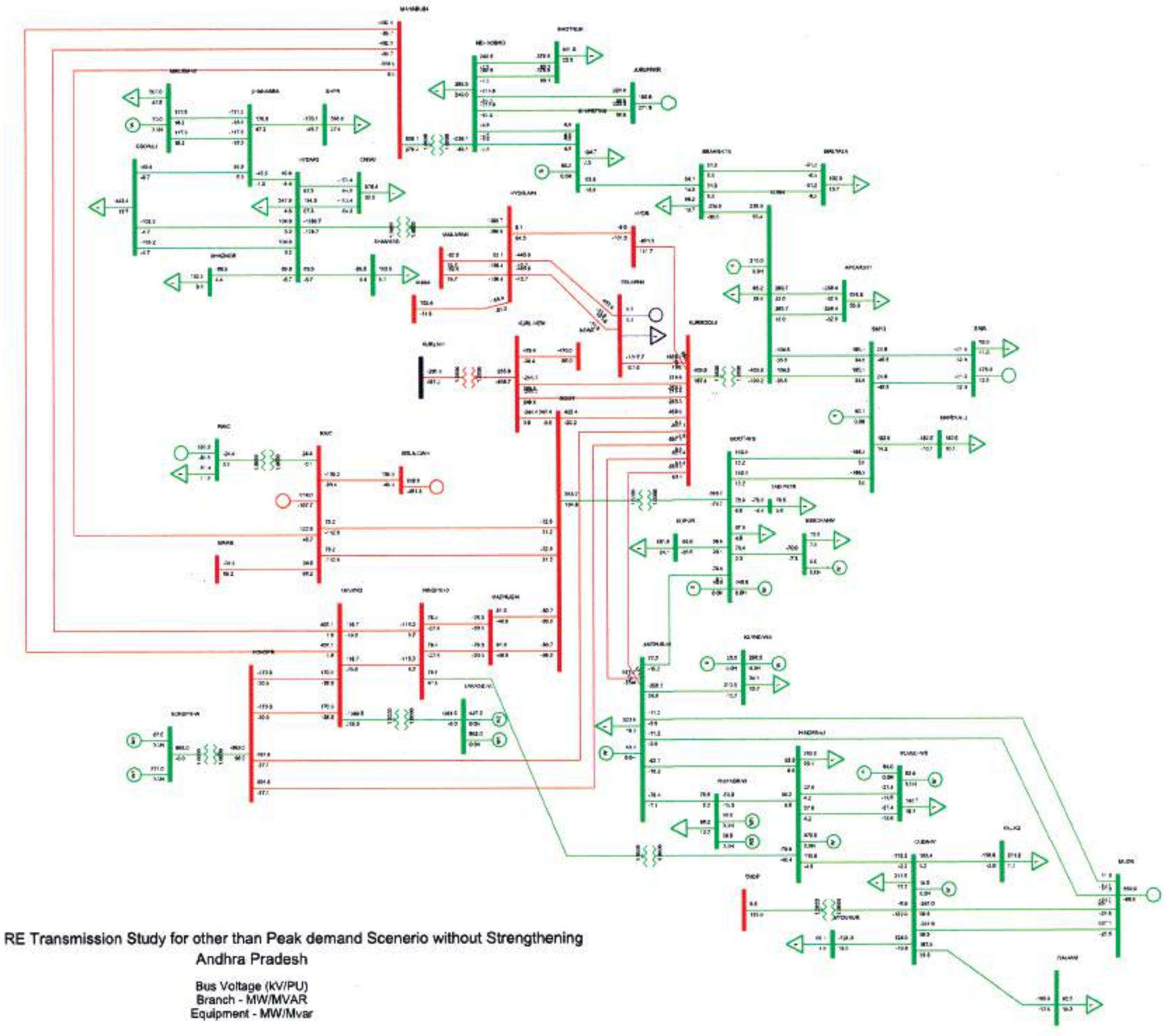

RE Transmission Study for other than Peak demand Scenerio without Strengthening
Andhra Pradesh

Bus Voltage (kV/PU)
Branch - MW/MVAR
Equipment - MW/Mvar

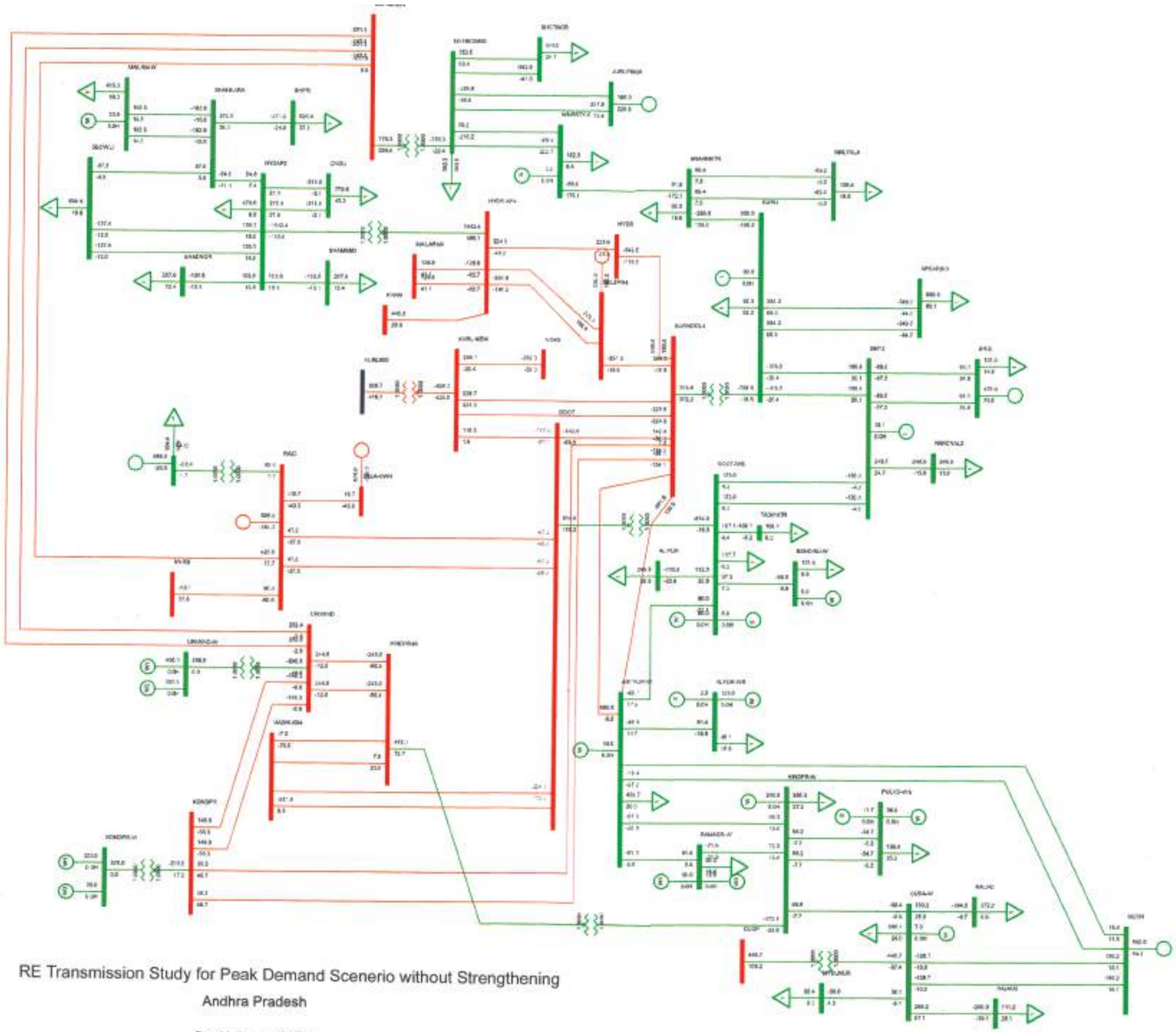

RE Transmission Study for Peak Demand Scenerio without Strengthening

Andhra Pradesh

Bus Voltage - kV/PU
Branch - MW/MVAR
Equipment - MW/MVAR

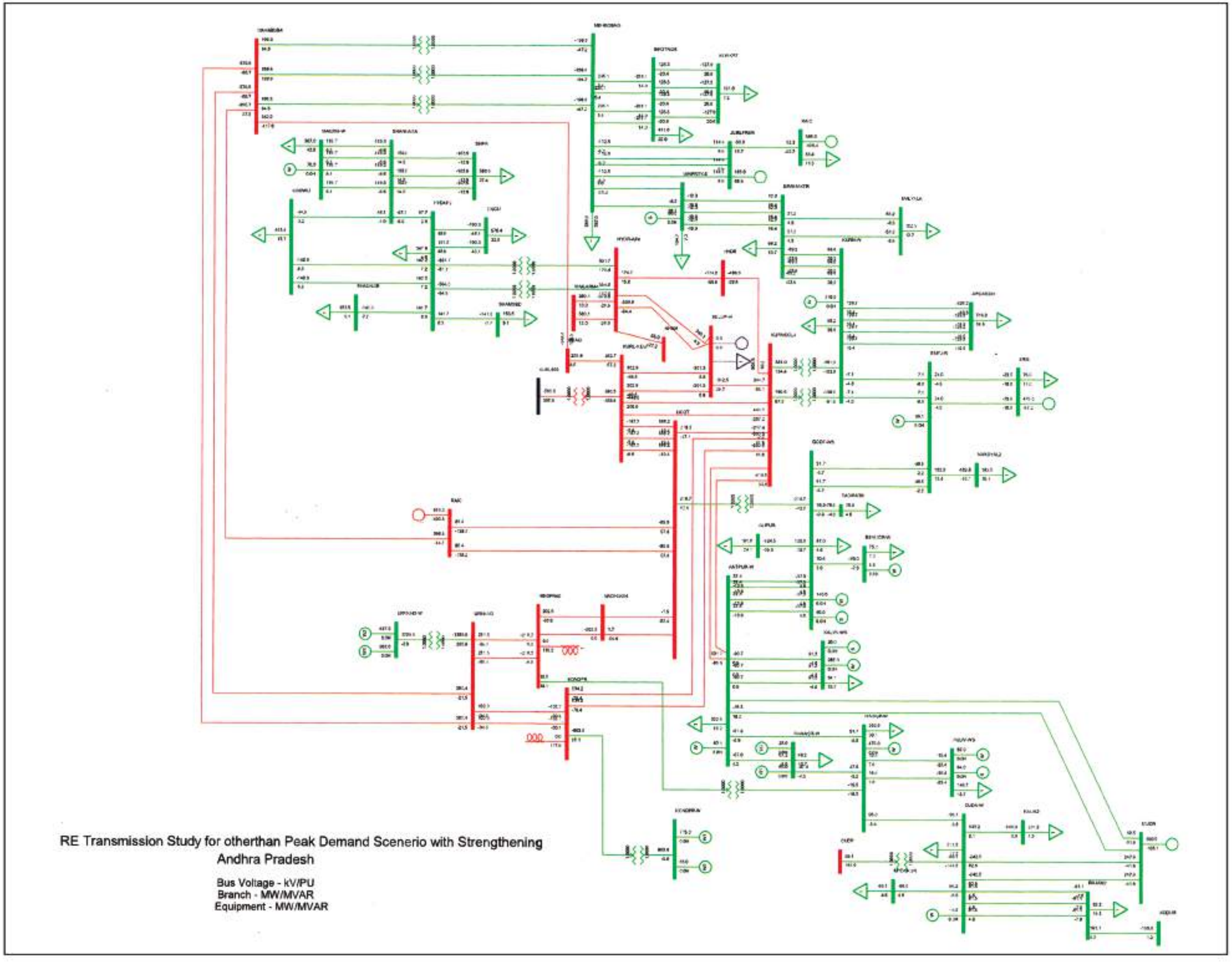
RE Transmission Study for otherthan Peak Demand Scenerio with Strengthening
Andhra Pradesh
Bus Voltage - kV/PU
Branch - MW/MVAR
Equipment - MW/MVAR

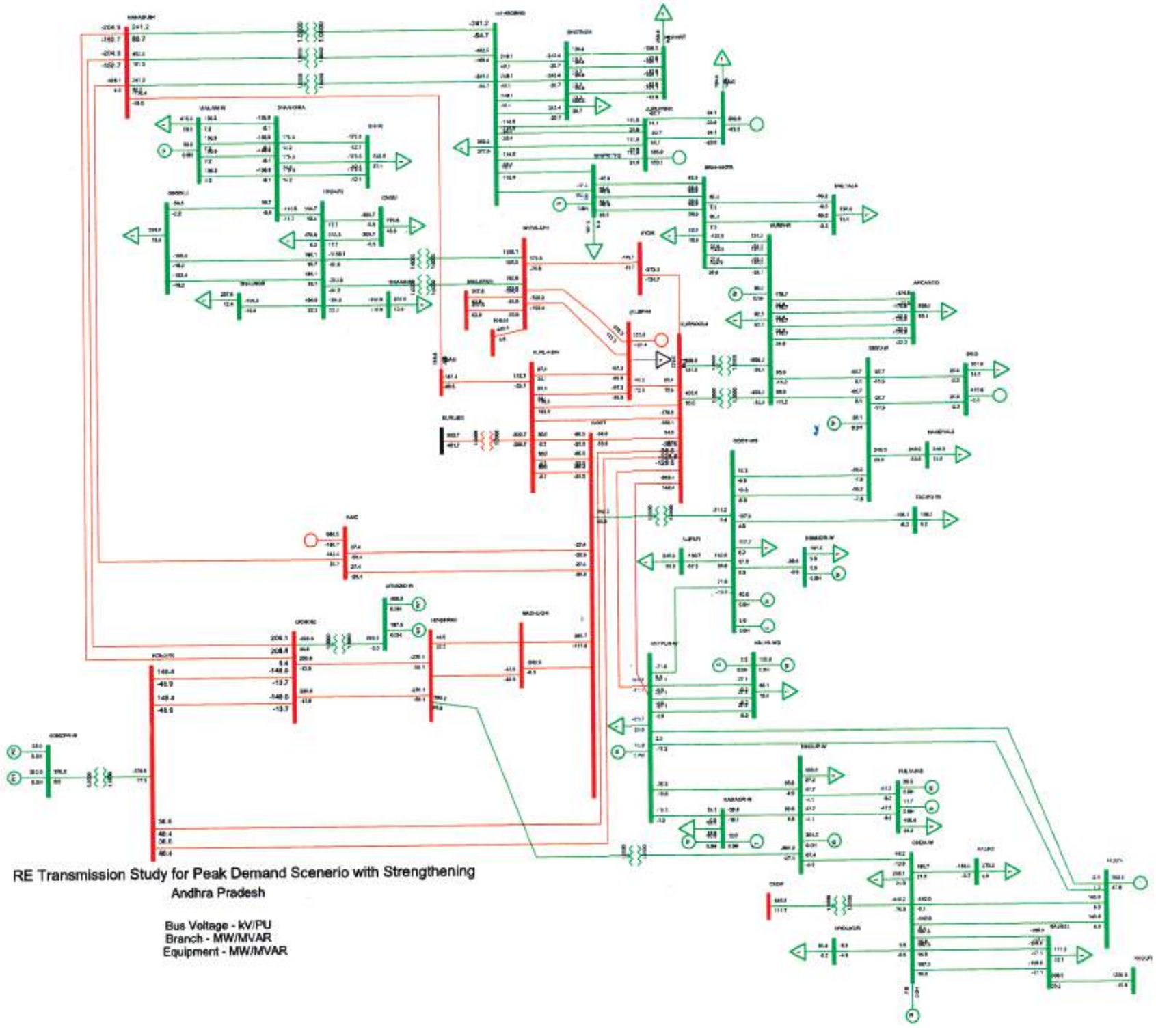
RE Transmission Study for Peak Demand Scenerio with Strengthening
Andhra Pradesh
Bus Voltage - kV/PU
Branch - MW/MVAR
Equipment - MW/MVAR

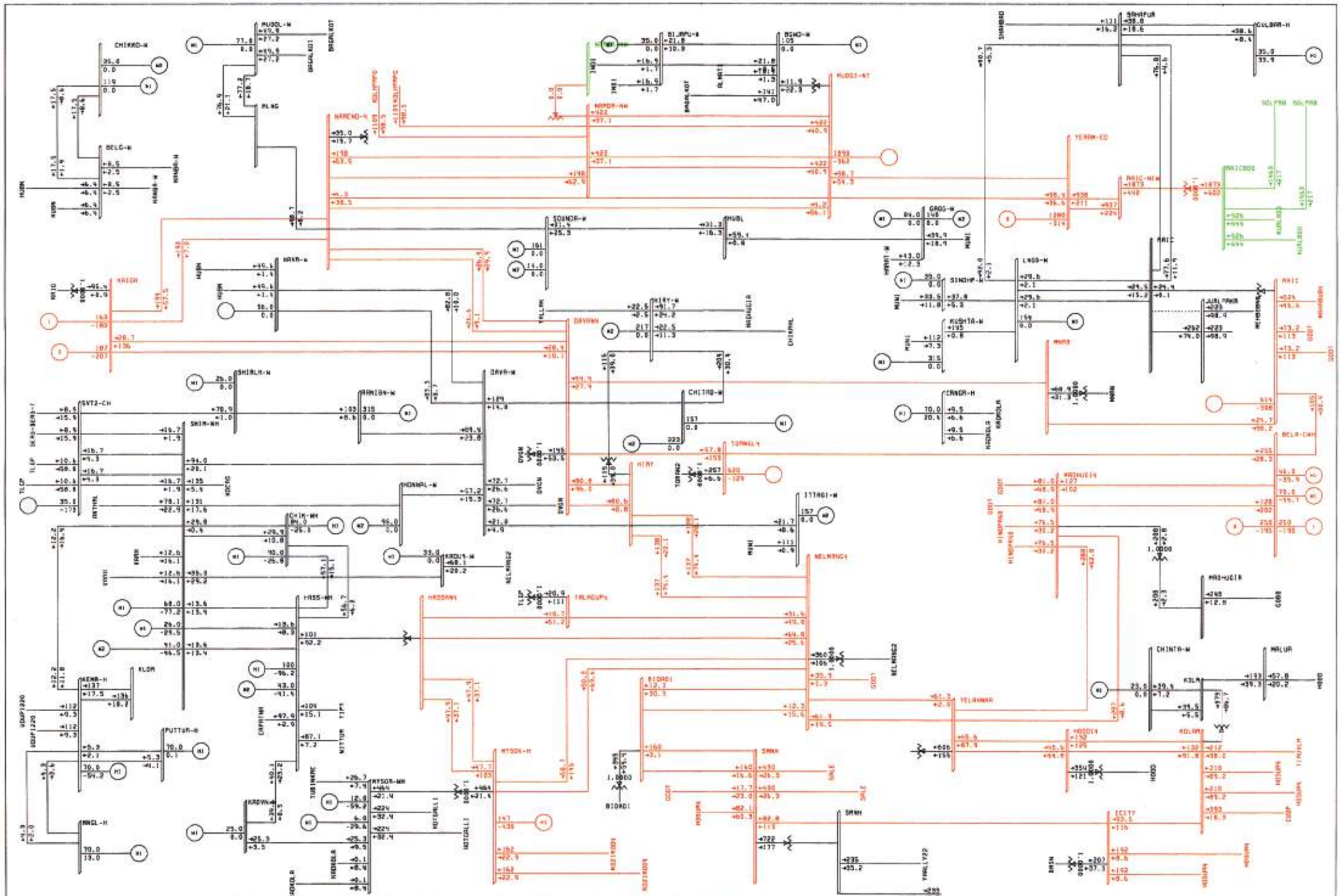
KARNATAKA
OFF PEAK-WITHOUT STRENGTHENING
SUN, JUN 03 2012 13:38
KV: ≤220 ,≤400 ,≤765
BUS - NONE
BRANCH - MW/MVAR
EQUIPMENT - MW/MVAR

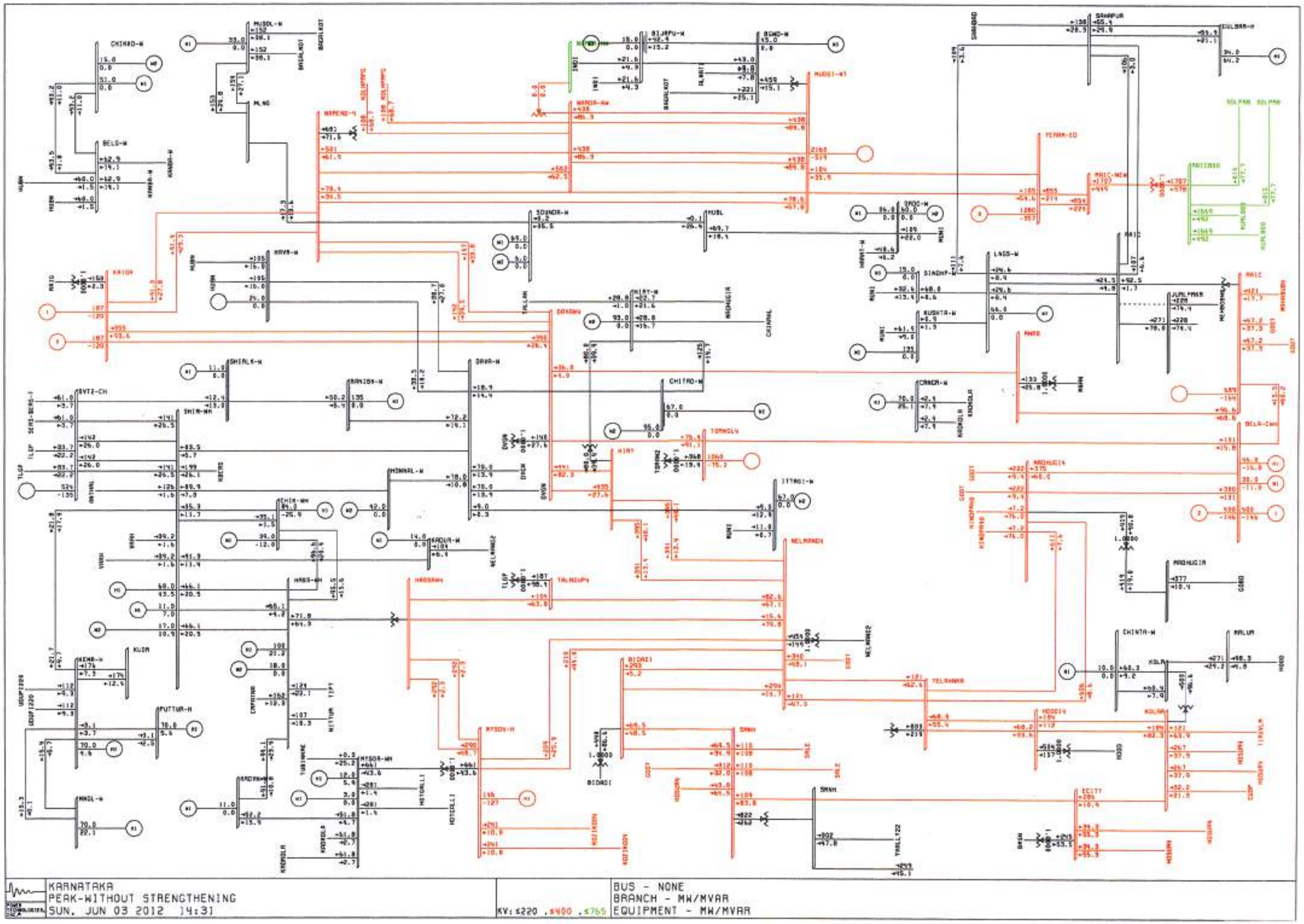
KARNATAKA
PEAK-WITHOUT STRENGTHENING
SUN, JUN 03 2012 14:31
KV: ≤220 ,≥400 ,≥765
BUS - NONE
BRANCH - MW/MVAR
EQUIPMENT - MW/MVAR

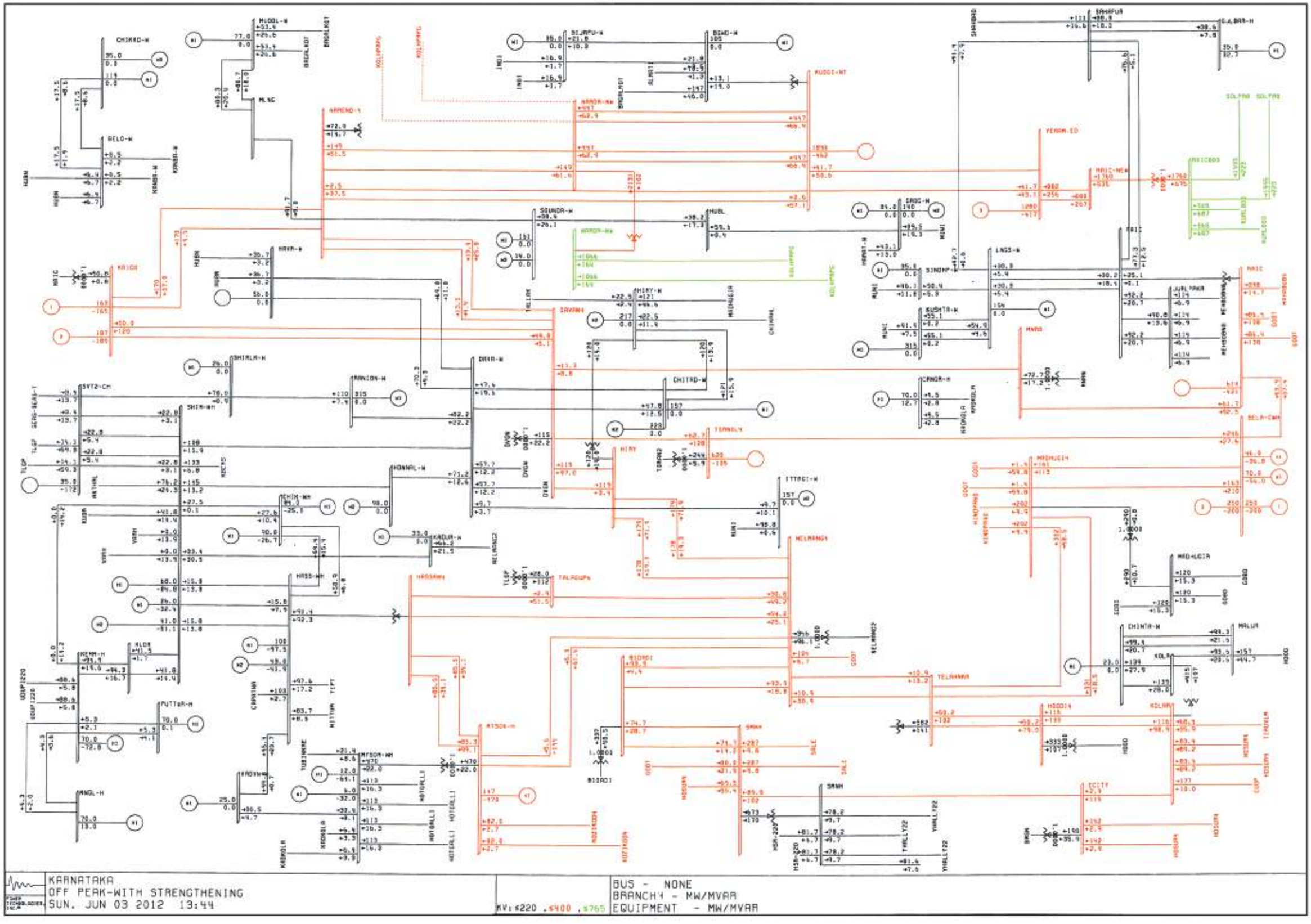
KARNATAKA
OFF PEAK-WITH STRENGTHENING
SUN. JUN 03 2012 13:44
KV: ≤220 , ≤400 , ≤765
BUS - NONE
BRANCH - MW/MVAR
EQUIPMENT - MW/MVAR

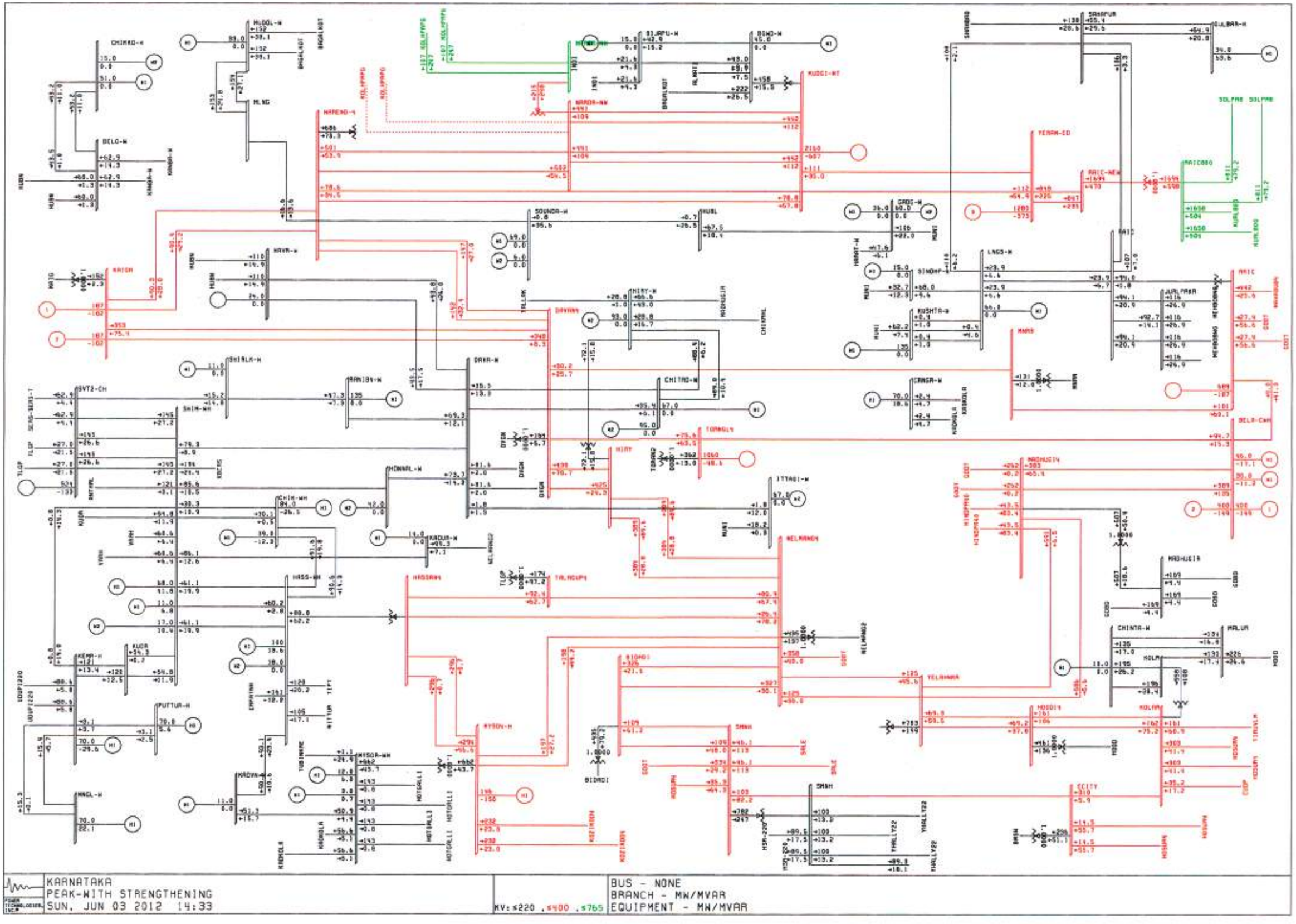
KARNATAKA
PEAK-WITH STRENGTHENING
SUN, JUN 03 2012 14:33
KV: ≤220 , ≤400 , ≤765
BUS - NONE
BRANCH - MW/MVAR
EQUIPMENT - MW/MVAR

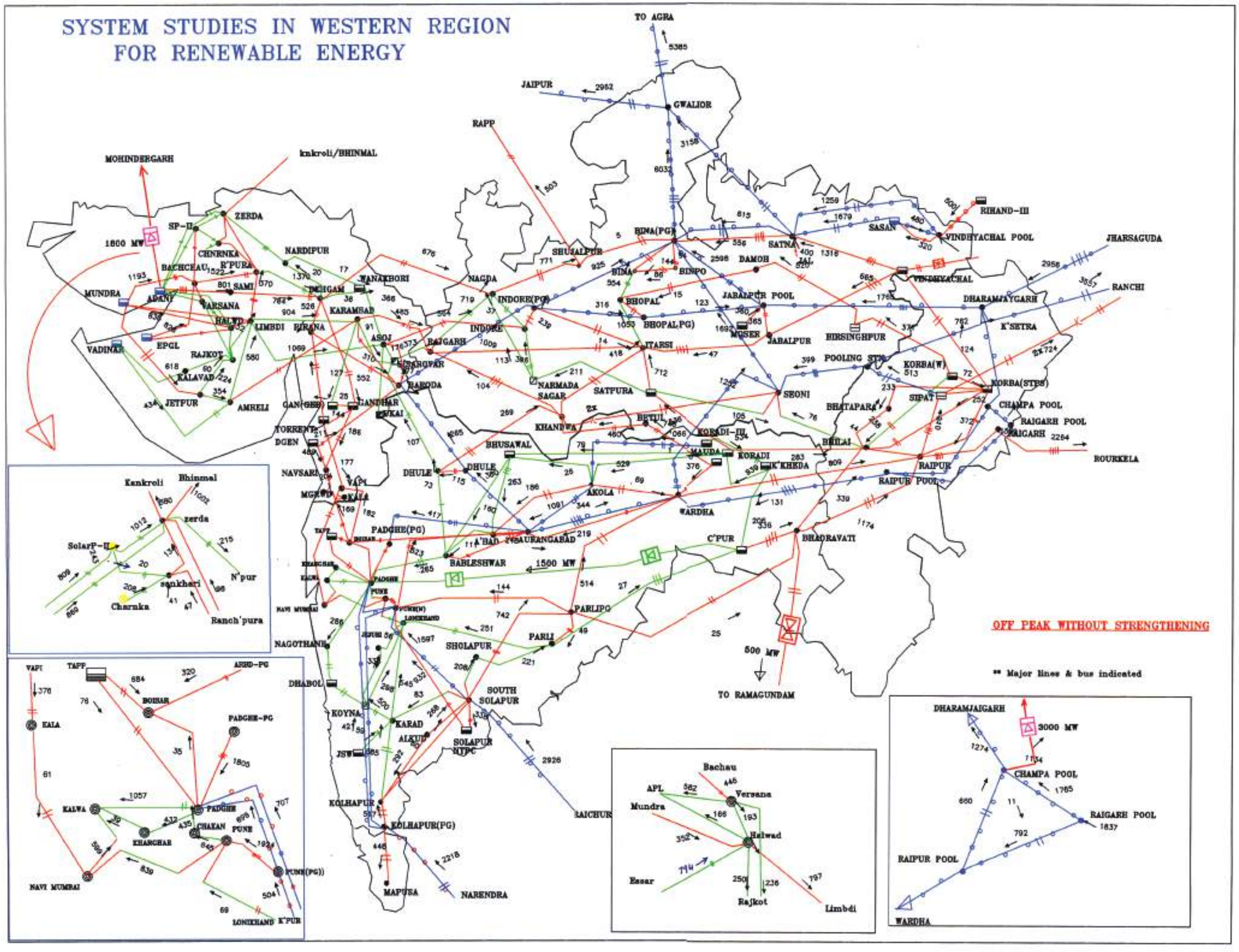
SYSTEM STUDIES IN WESTERN REGION
FOR RENEWABLE ENERGY
TO AGRA
JAIPUR
GWALIOR
RAPP
MOHINDERGARH
kankroli/BHINMAL
1800 MW
ZERDA
SP-II
CHNRNKA
BACHCEAU
R'PURA
NARDIPUR
MUNDRA
ADANI
VARSANA
HALWD
LIMBDI
VADINAR
EPGL
RAJKOT
KALAVAD
JETPUR
AMRELI
DEHGAM
KARAMSAD
NANAKHORI
ASOJ
RAJGARH
BARODA
GANDHAR
KAKI
TORRENT
DGEN
NAVSARI
VAPI
KALA
NAGDA
INDORE(PG)
INDORE
SHUJALPUR
BINA(PG)
BINA
BINPO
BHOPAL
BHOPAL(PG)
ITARSI
NARMADA SAGAR
SATPURA
KHANDWA
BHUSAWAL
DHULE
AKOLA
AURANGABAD
PADGHE(PG)
BABLESHWAR
1500 MW
PARLIPG
PARLI
SHOLAPUR
SOUTH SOLAPUR
SOLAPUR NTPC
NAGOTHANE
DHABOL
KOYNA
KARAD
ALKUD
JSW
KOLHAPUR
KOLHAPUR(PG)
MAPUSA
NARENDRA
RAICHUR
SATNA
DAMOH
JABALPUR POOL
MUSER
JABALPUR
SEONI
BIRSINGHPUR
POOLING STN
KORBA(W)
KORBA(STPS)
SIPAT
BHILAI
CHAMPA POOL
RAIGARH POOL
RAIGARH
RAIPUR
RAIPUR POOL
WARDHA
C'PUR
BHADRAVATI
500 MW
TO RAMAGUNDAM
SASAN
RIHAND-III
VINDHYACHAL POOL
VINDHYACHAL
JHARSAGUDA
RANCHI
DHARAMJAYGARH
K'SETRA
BOURKELA
OFF PEAK WITHOUT STRENGTHENING
** Major lines & bus indicated
Kankroli
Bhinmal
zerda
SolarP-II
sankhari
N'pur
Charnka
Ranch'pura
VAPI
TAPP
ASHD-PG
BOISAR
KALA
PADGHE-PG
KALWA
PADGHE
KHARGHAR
CHAKAN
PUNE
PUNE(PG)
NAVI MUMBAI
LONIKHAND
K'PUR
Bachau
APL
Versana
Mundra
Halwad
Essar
Rajkot
Limbdi
DHARAMJAIGARH
3000 MW
CHAMPA POOL
RAIGARH POOL
RAIPUR POOL
WARDHA

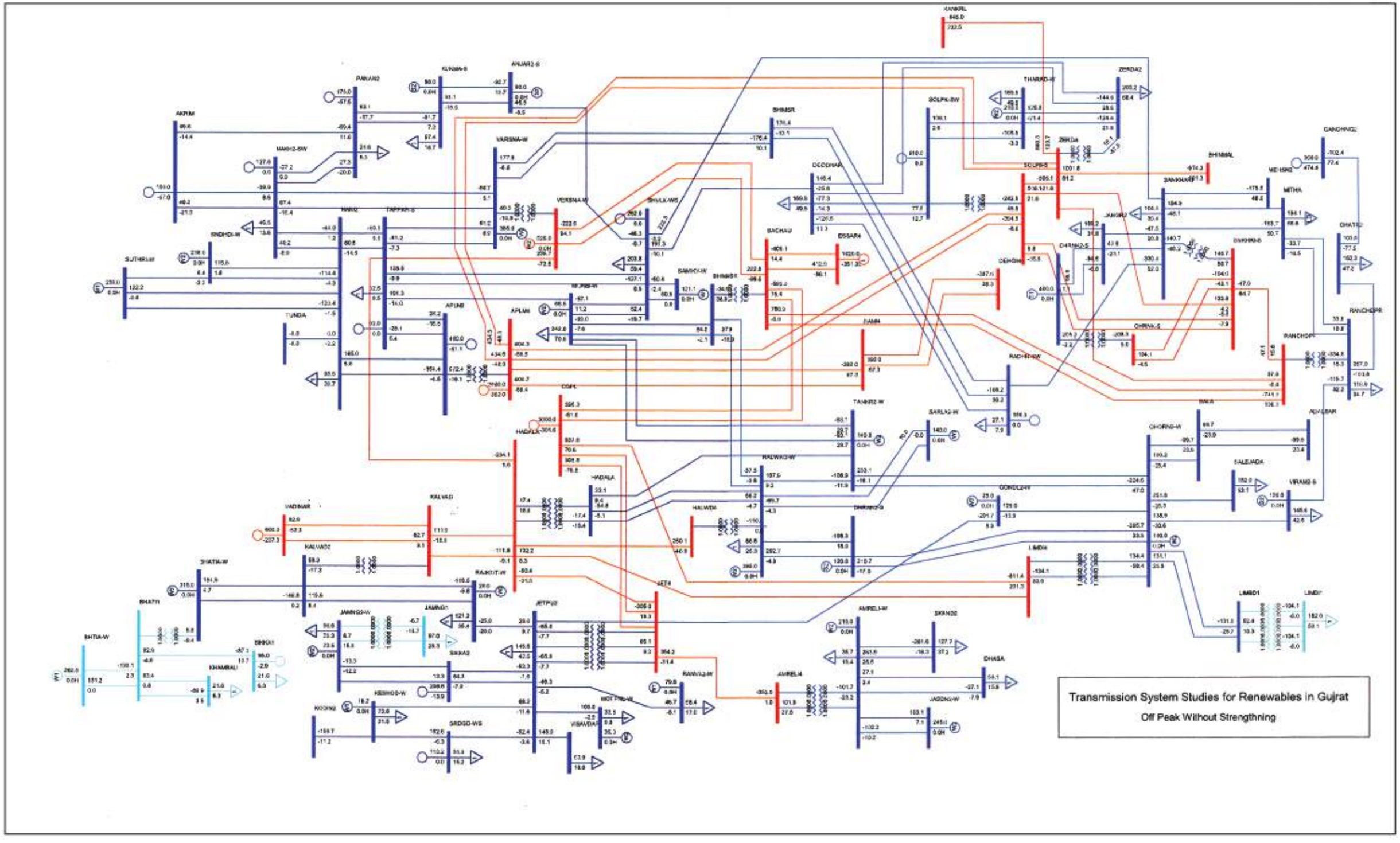
Transmission System Studies for Renewables in Gujrat
Off Peak Without Strengthning

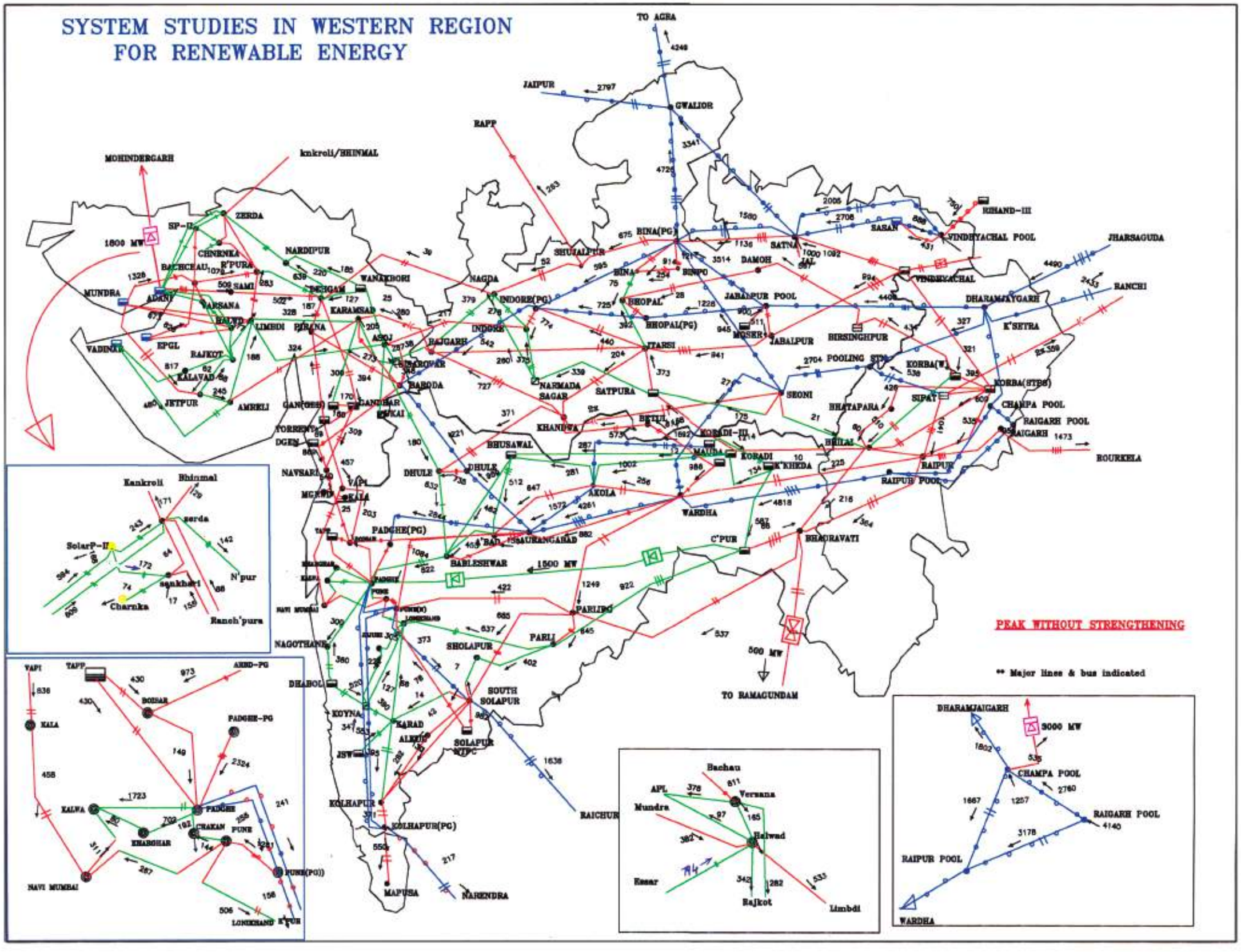
SYSTEM STUDIES IN WESTERN REGION
FOR RENEWABLE ENERGY
TO AGRA
JAIPUR
GWALIOR
RAPP
MOHINDERGARH
knkroli/BHINMAL
1500 MW
MUNDRA
ADANI
VADINAR
EPGL
RAJKOT
JETPUR
AMRELI
ZERDA
SP-II
CHHENKA
BACHCHAU
R'PURA
NARDIPUR
VARSANA
HALVD
LIMBDI
PIRANA
KARAMSAD
ASOJ
WANAKBORI
DEHGAM
SAMI
GANDHAR
BARODA
KAKRAPAR
RAJGARH
INDORE
INDORE(PG)
NAGDA
SHUJALPUR
BINA(PG)
BINA
BINPO
BHOPAL
BHOPAL(PG)
ITARSI
NARMADA SAGAR
SATPURA
KHANDWA
BHUSAWAL
DHULE
AKOLA
WARDHA
PADGHE(PG)
AURANGABAD
BABLESHWAR
PARLI(PG)
PARLI
SHOLAPUR
SOUTH SOLAPUR
SOLAPUR NTPC
KOLHAPUR
KOLHAPUR(PG)
RAICHUR
NARENDRA
MAPUSA
NAGOTHANE
DHABOL
KOYNA
KARAD
ALKUD
JSW
NAVI MUMBAI
PUNE
PUNE(PG)
LONIKHAND
NAVSARI
VAPI
TAPP
BOISAR
KALWA
KHARGHAR
CHAKAN
PADGHE
PADGHE-PG
AKRD-PG
KALA
SATNA
DAMOH
JABALPUR POOL
JABALPUR
MOSER
BIRSINGHPUR
POOLING STN
SEONI
BHATAPARA
SIPAT
KORBA(W)
KORBA(STPS)
CHAMPA POOL
RAIGARH POOL
RAIGARH
BHILAI
RAIPUR
RAIPUR POOL
KORADI-III
KORADI
K'KHEDA
BHADRAVATI
C'PUR
VINDHYACHAL POOL
VINDHYACHAL
SASAN
RIHAND-III
DHARAMJAYGARH
K'SETRA
JHARSAGUDA
RANCHI
ROURKELA
TO RAMAGUNDAM
500 MW
3000 MW
PEAK WITHOUT STRENGTHENING
** Major lines & bus indicated
Kankroli
Bhinmal
serda
SolarP-II
sankhari
Charnka
N'pur
Ranch'pura
Bachau
APL
Versana
Mundra
Halwad
Essar
Rajkot
Limbdi
BHARAMJAIGARH
CHAMPA POOL
RAIGARH POOL
RAIPUR POOL
WARDHA

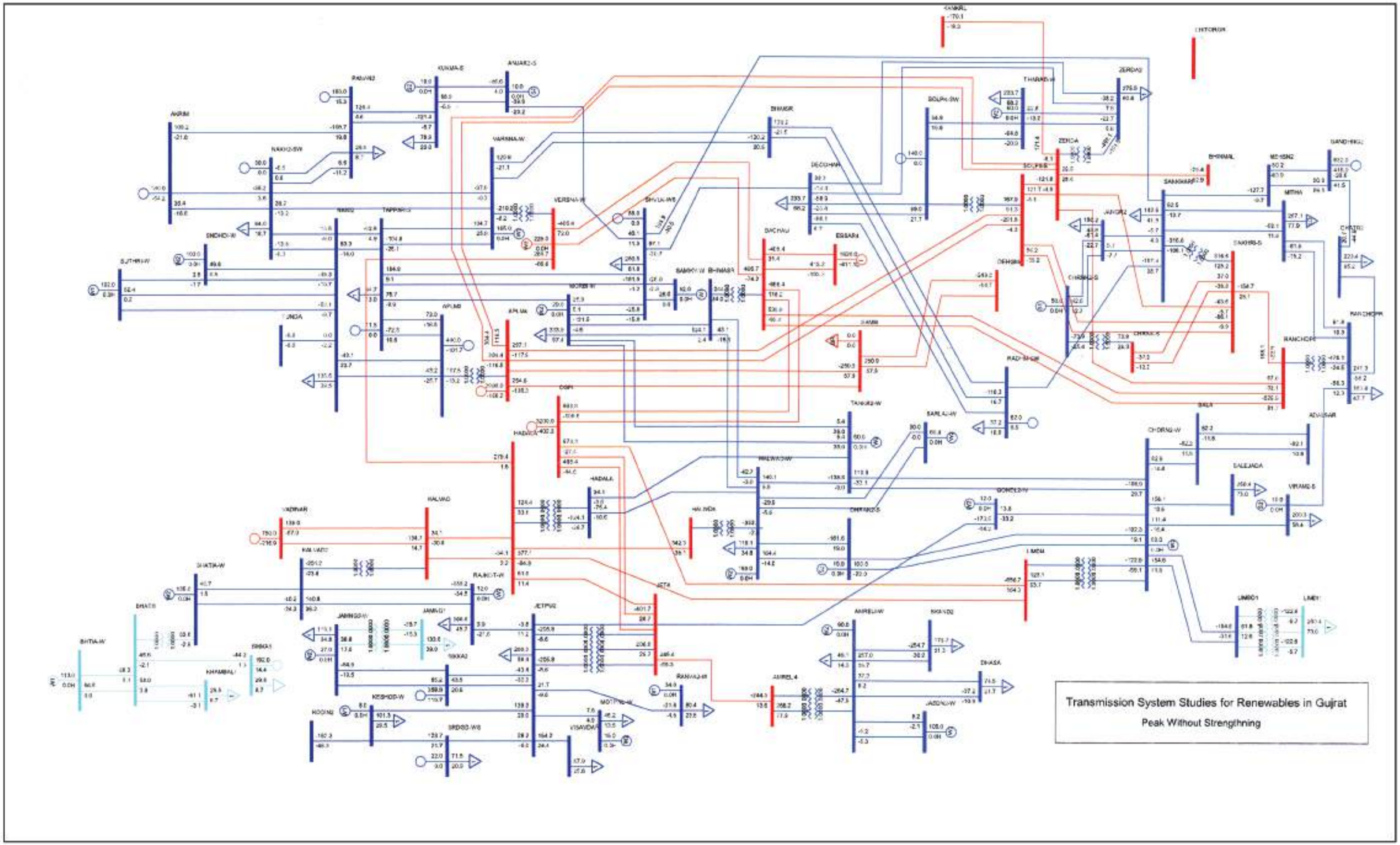
Transmission System Studies for Renewables in Gujrat
Peak Without Strengthning

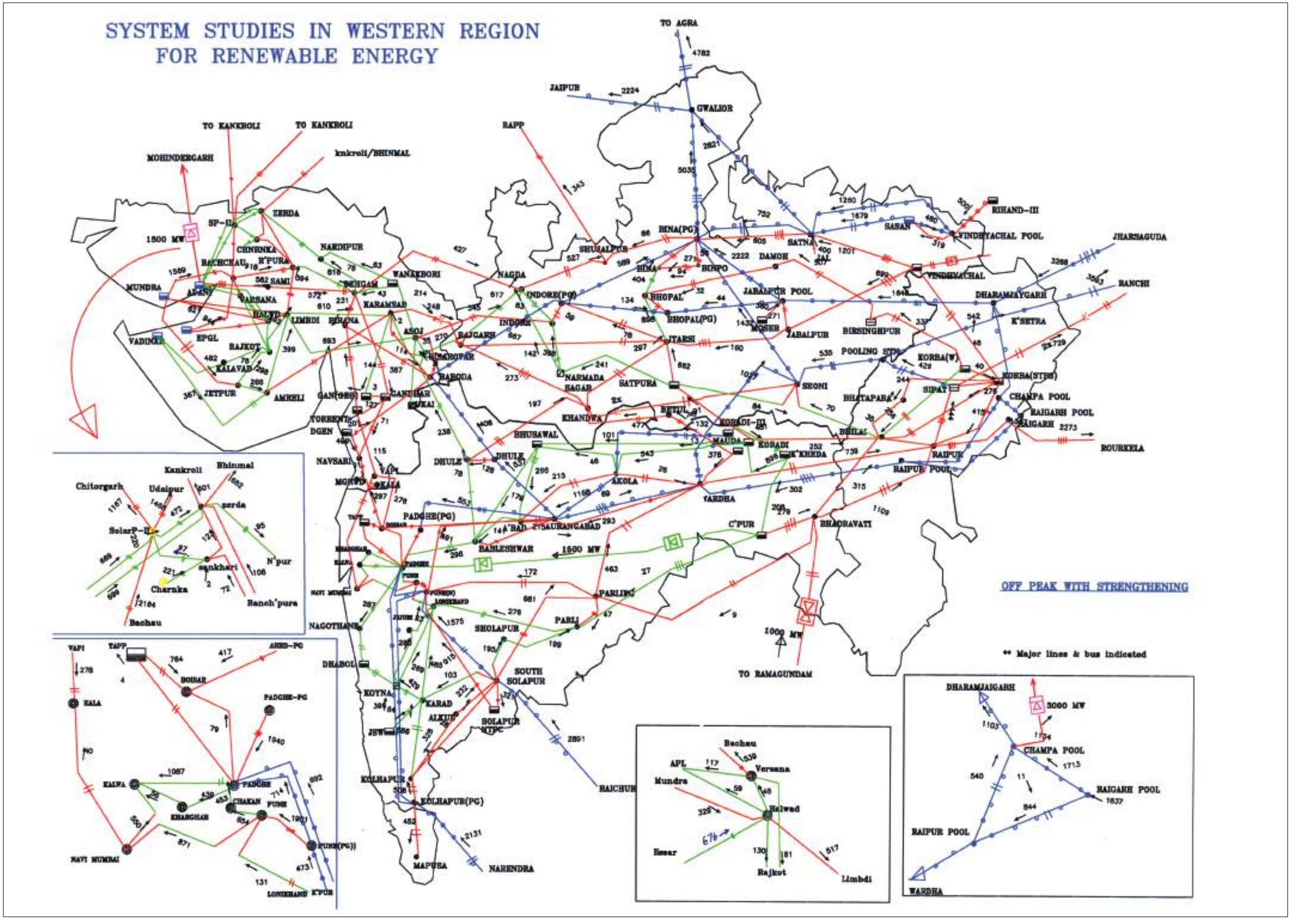
SYSTEM STUDIES IN WESTERN REGION
FOR RENEWABLE ENERGY
OFF PEAK WITH STRENGTHENING
** Major lines & bus indicated
TO AGRA
JAIPUR
GWALIOR
TO KANKROLI
TO KANKROLI
kankroli/BHINMAL
MOHINDERGARH
RAPP
1500 MW
MUNDRA
VADINAR
ZERDA
SP-II
CHINRNKA
BACHCHAU
NARDIPUR
WANAKBORI
NAGDA
INDORE(PG)
INDORE
BINA(PG)
SHUJALPUR
BINA
BINPO
DAMOH
SATNA
SASAN
RIHAND-III
VINDHYACHAL POOL
VINDHYACHAL
JHARSAGUDA
RANCHI
DHARAMJAYGARH
K'SETRA
BHOPAL
BHOPAL(PG)
JABALPUR POOL
MOSER
JABALPUR
BIRSINGHPUR
POOLING STN
KORBA(W)
KORBA(STPS)
CHAMPA POOL
RAIGARH POOL
RAIGARH
BOURKELA
ITARSI
SHONI
BHILAI
RAIPUR
RAIPUR POOL
BHADRAVATI
C'PUR
WARDHA
AKOLA
AURANGABAD
PARLI(PG)
PARLI
SHOLAPUR
SOUTH SOLAPUR
SOLAPUR NTPC
KOLHAPUR
KOLHAPUR(PG)
MAPUSA
NARENDRA
RAICHUR
TO RAMAGUNDAM
1000 MW
BHUSAWAL
DHULE
PADGHE(PG)
BASLESHWAR
NAVI MUMBAI
NAGOTHANE
DHABOL
KOYNA
KARAD
ALKUD
JSW
SATPURA
NARMADA SAGAR
KHANDWA
KORADI-III
KORADI
K'KHEDA
MAUDA
BHILAI
BHATAPARA
SIPAT
ASOJ
RAJGARH
BARODA
GANDHAR
KAKRAPAR
KARAMSAD
BAKROL
HIRANA
LIMBDI
RAJKOT
KALAVAD
JETPUR
AMRELI
EPGL
ADANI
VARSANA
SAMI
NAVSARI
VAPI
KALA
DGEN
TORRENT
GANDHI
Kankroli
Bhinmal
Chitorgarh
Udaipur
zerda
SolarP-II
N'pur
sankhari
Charnka
Ranch'pura
Bachau
VAPI
TAPP
BOISAR
AHMD-PG
KALA
PADGHE-PG
KALWA
PADGHE
KHARGHAR
CHAKAN
PUNE
PUNE(PG)
NAVI MUMBAI
LONIKAND
K'PUR
Bachau
APL
Mundra
Versana
Halwad
Essar
Rajkot
Limbdi
DHARAMJAIGARH
3000 MW
CHAMPA POOL
RAIGARH POOL
RAIPUR POOL
WARDHA

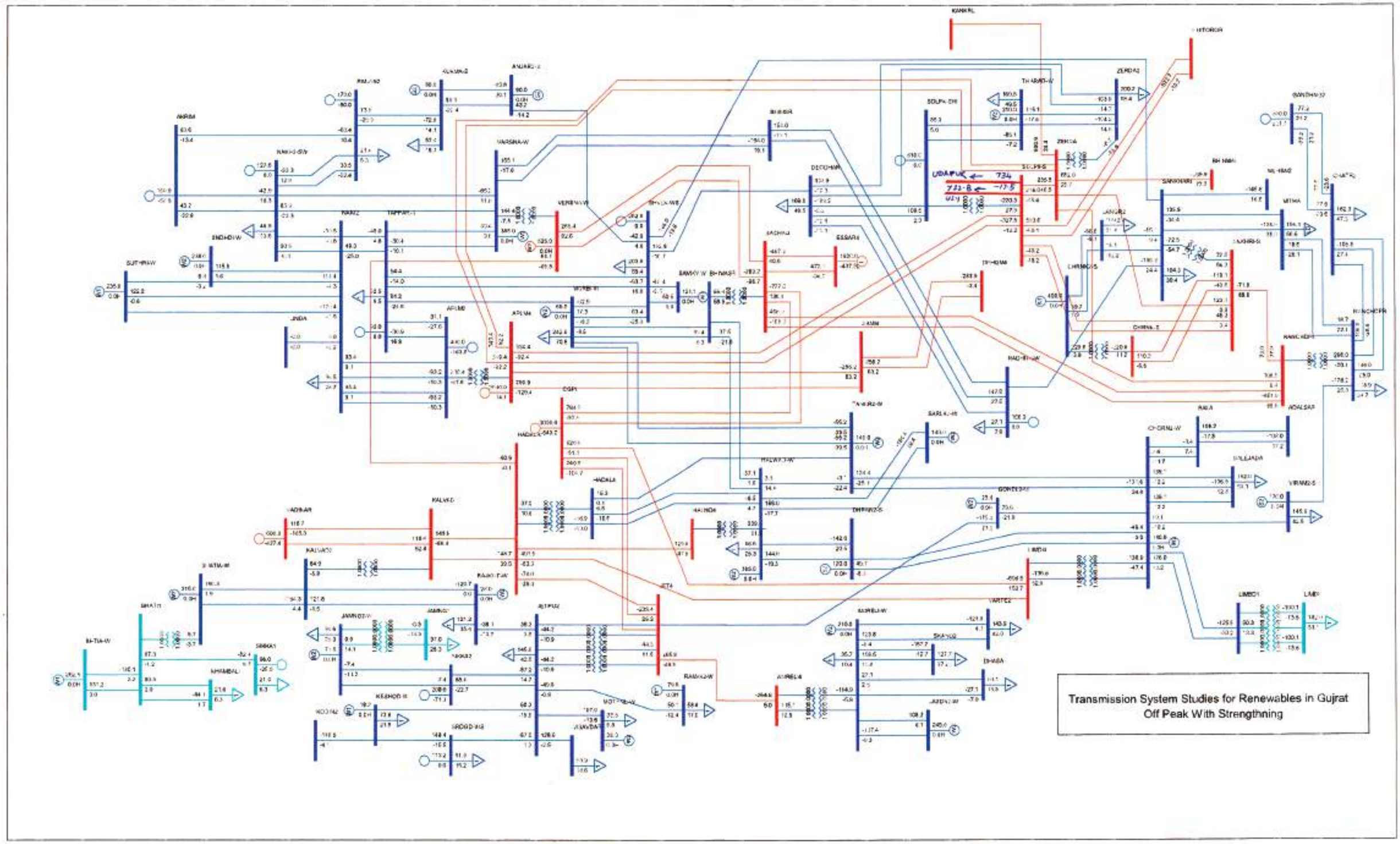
Transmission System Studies for Renewables in Gujrat
Off Peak With Strengthning

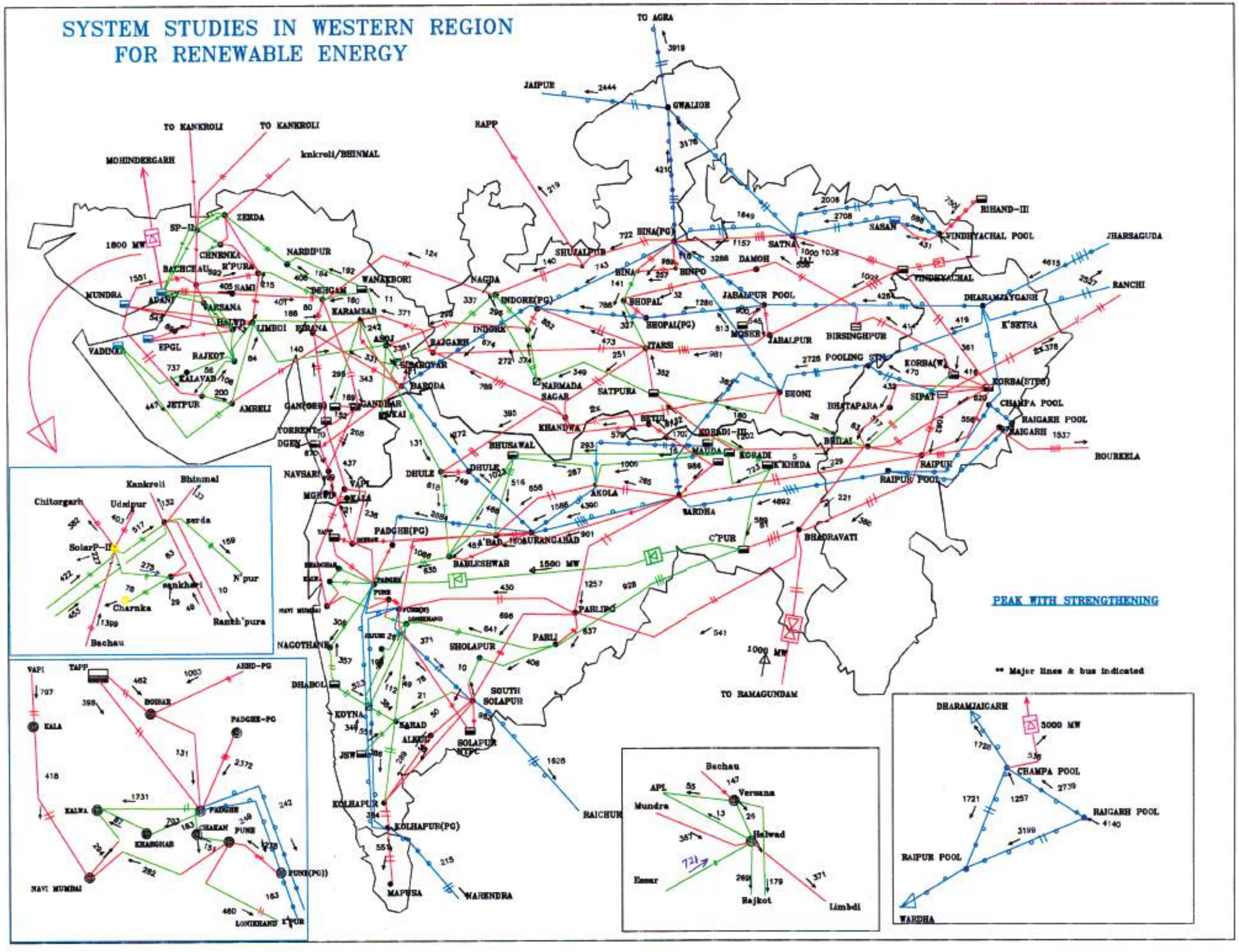
SYSTEM STUDIES IN WESTERN REGION
FOR RENEWABLE ENERGY
TO AGRA
JAIPUR
GWALIOR
TO KANKROLI
TO KANKROLI
kankroli/BHINMAL
MOHINDERGARH
RAPP
1800 MW
ZERDA
SP-II
CHERNKA
R'PURA
BACHCHAU
NARDIPUR
SAMI
BECHCAM
WANAKBORI
MUNDRA
ADANI
VARSANA
HALWD
LIMBDI
EPGL
RAJKOT
KALAVAD
JETPUR
AMRELI
VADINAR
KARAMSAD
ASOJ
SIMROWAR
BARODA
GANDHAR
KAKRAPAR
GANDHAR
TORRENT
DGEN
NAVSARI
VAPI
MGNPT
KALA
NAGDA
INDORE(PG)
INDORE
RAJGARH
SHUJALPUR
BINA(PG)
BINA
BHOPAL
BHOPAL(PG)
BINPO
DAMOH
SATNA
SASAN
RIHAND-III
VINDHYACHAL POOL
VINDHYACHAL
JHARSAGUDA
RANCHI
JABALPUR POOL
MOSER
JABALPUR
BIRSINGHPUR
DHARAMJAYGARH
K'SETRA
ITARSI
POOLING STN
KORBA(W)
KORBA(STPS)
NARMADA SAGAR
SATPURA
SEONI
BHILAI
SIPAT
CHAMPA POOL
RAIGARH POOL
RAIGARH
BOURKELA
KHANDWA
BETUL
KORADI-III
MAHDA
KORADI
K'KHEDA
RAIPUR
RAIPUR POOL
BHUSAWAL
DHULE
AKOLA
WARDHA
PADGHE(PG)
A'BAD
AURANGABAD
C'PUR
BHADRAVATI
BABLESHWAR
1500 MW
PARLI(PG)
PARLI
SHOLAPUR
NAGOTHANE
DHABOL
KOYNA
KARAD
ALKUD
SOUTH SOLAPUR
SOLAPUR NTPC
JSW
KOLHAPUR
KOLHAPUR(PG)
MAPUSA
RAICHUR
NARENDRA
1000 MW
TO RAMAGUNDAM
PEAK WITH STRENGTHENING
** Major lines & bus indicated
Kankroli
Bhinmal
Chitorgarh
Udaipur
zerda
SolarP-II
N'pur
sankhari
Charnka
Ranth'pura
Bachau
VAPI
TAPP
AKRD-PG
BOISAR
PADGHE-PG
KALA
KALWA
PADGHE
KHARGHAR
CHAKAN
PUNE
PUNE(PG)
NAVI MUMBAI
LONIKHAND
L'PUR
Bachau
APL
Versana
Mundra
Halwad
Essar
Rajkot
Limbdi
DHARAMJAIGARH
3000 MW
CHAMPA POOL
RAIGARH POOL
RAIPUR POOL
WARDHA

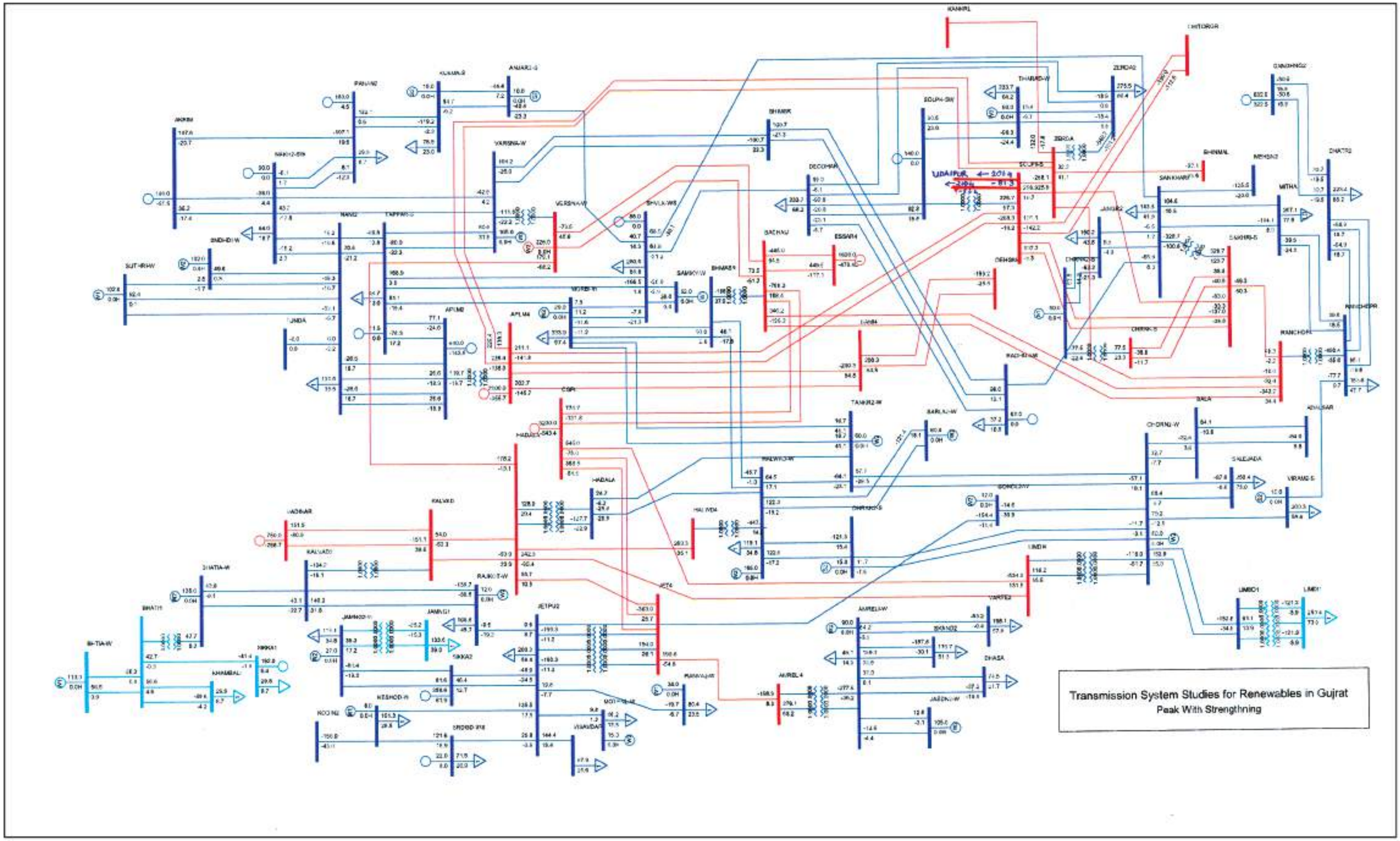
Transmission System Studies for Renewables in Gujrat
Peak With Strengthning

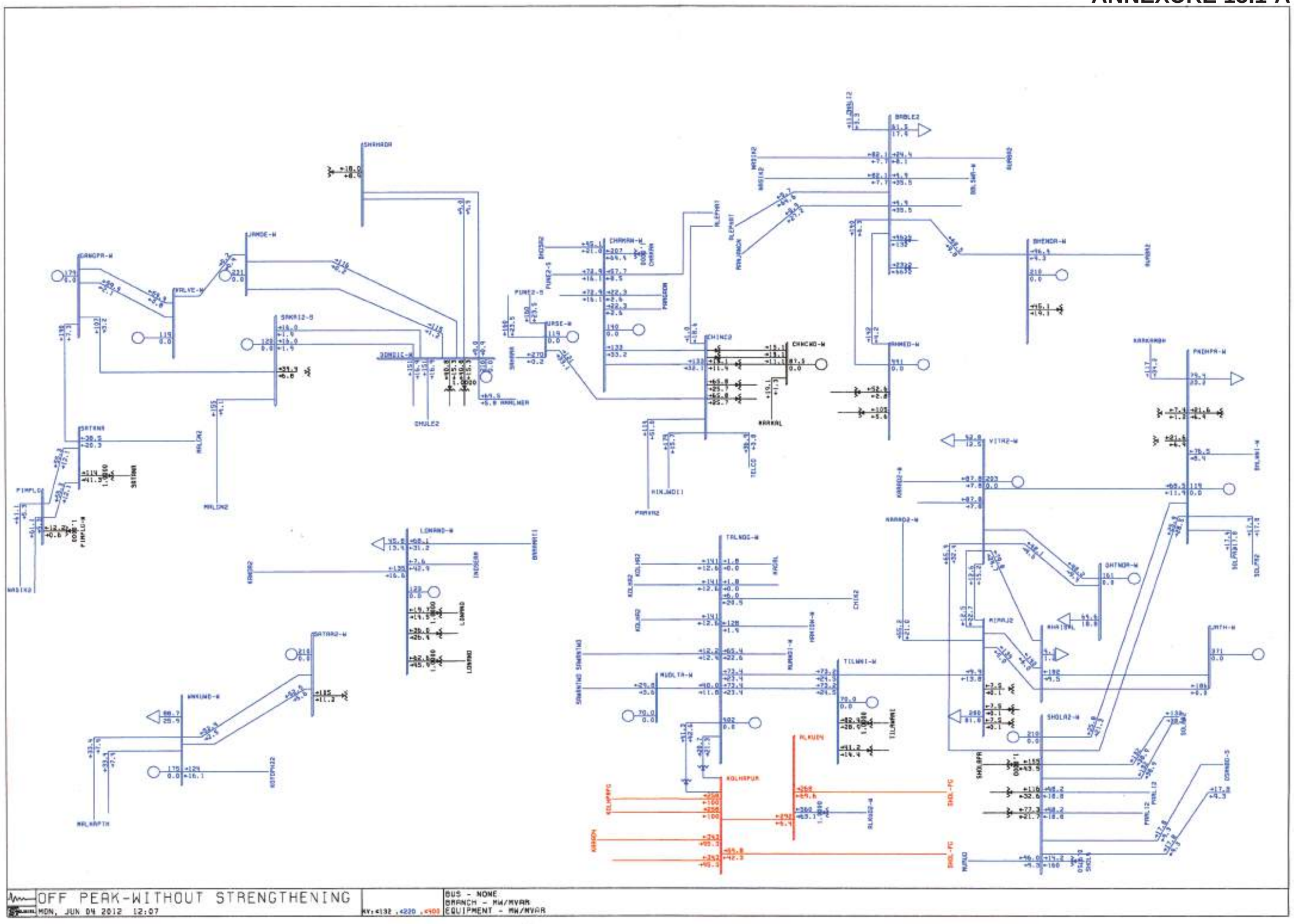
OFF PEAK-WITHOUT STRENGTHENING
MON, JUN 04 2012 12:07
BUS - NONE
BRANCH - MW/MVAR
EQUIPMENT - MW/MVAR

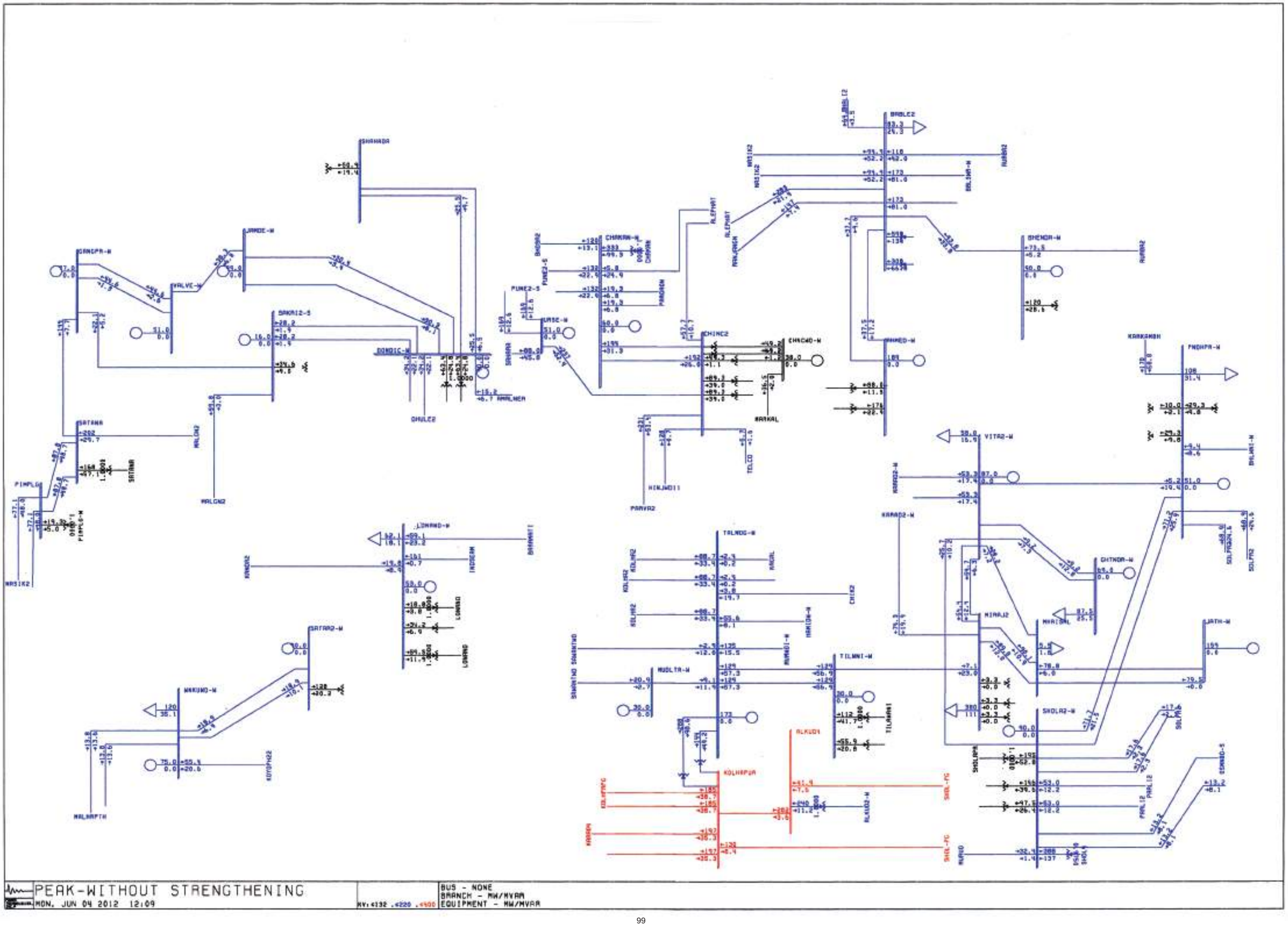
PEAK-WITHOUT STRENGTHENING
MON, JUN 04 2012 12:09
BUS - NONE
BRANCH - MW/MVAR
EQUIPMENT - MW/MVAR

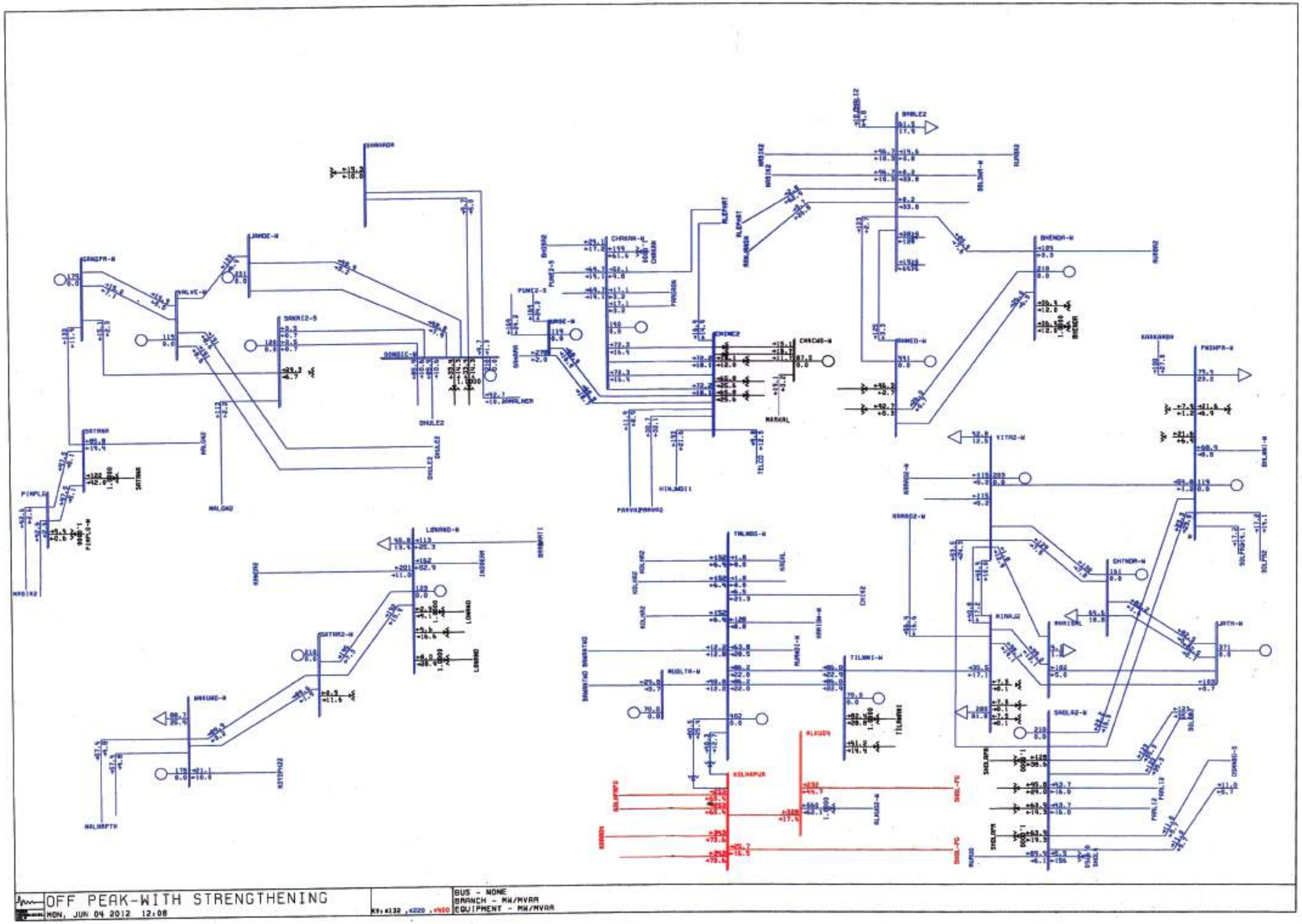
OFF PEAK-WITH STRENGTHENING
MON, JUN 04 2012 12:08
BUS - NONE
BRANCH - MW/MVAR
EQUIPMENT - MW/MVAR

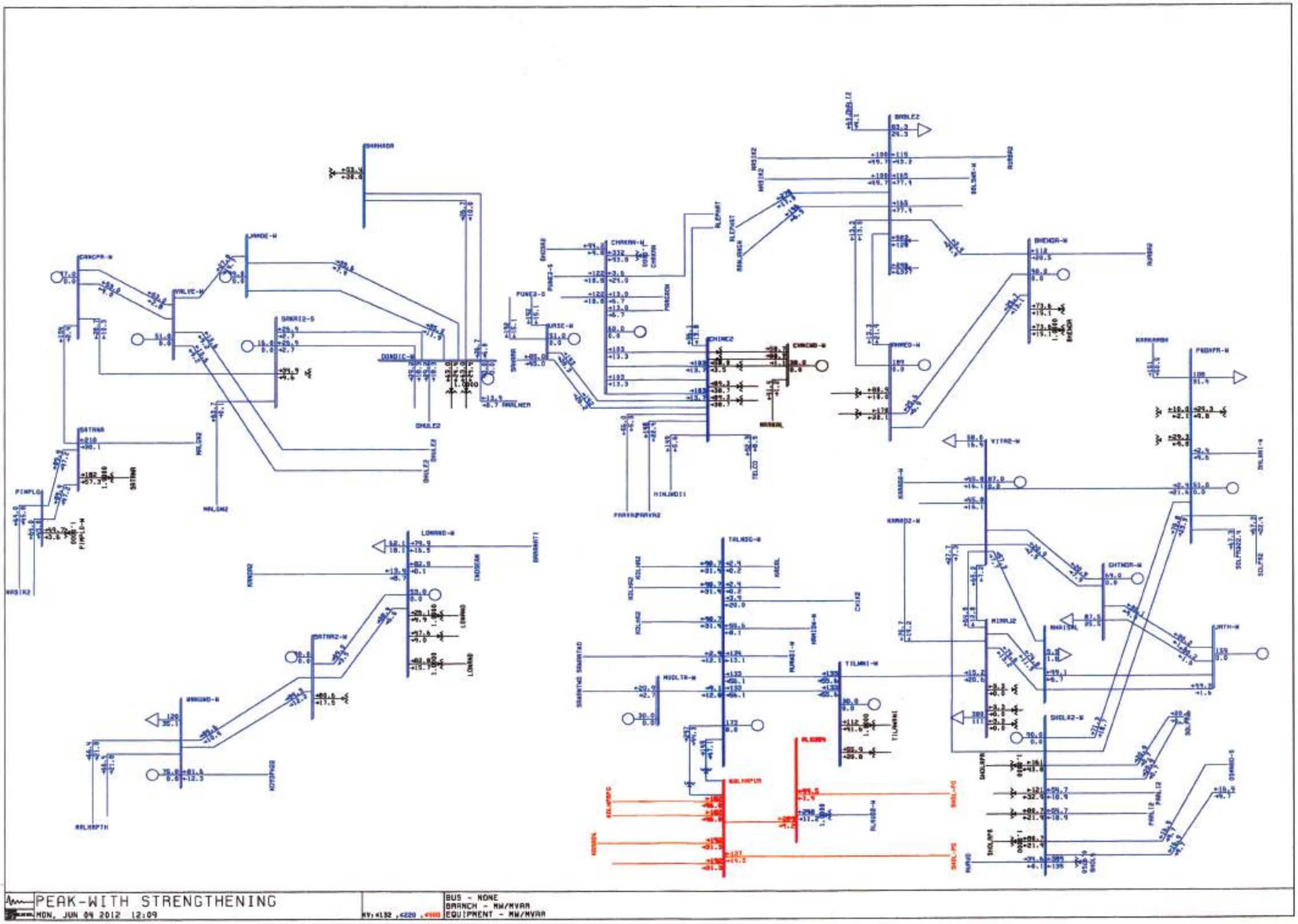
PEAK-WITH STRENGTHENING
MON, JUN 04 2012 12:09
BUS - NONE
BRANCH - MW/MVAR
EQUIPMENT - MW/MVAR

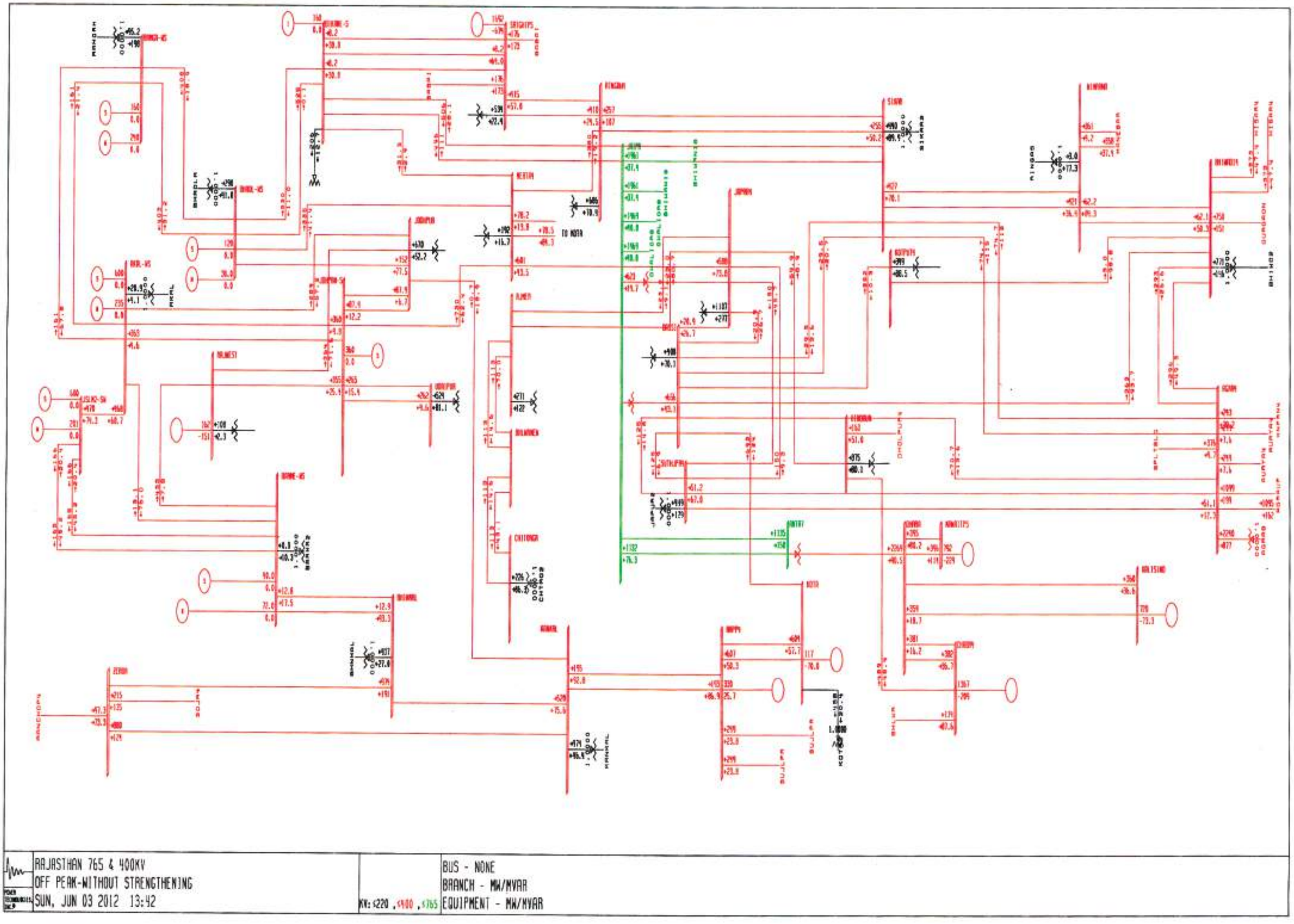
RAJASTHAN 765 & 400KV
OFF PEAK-WITHOUT STRENGTHENING
SUN, JUN 03 2012 13:42
KV: <220 , <400 , <765
BUS - NONE
BRANCH - MW/MVAR
EQUIPMENT - MW/MVAR

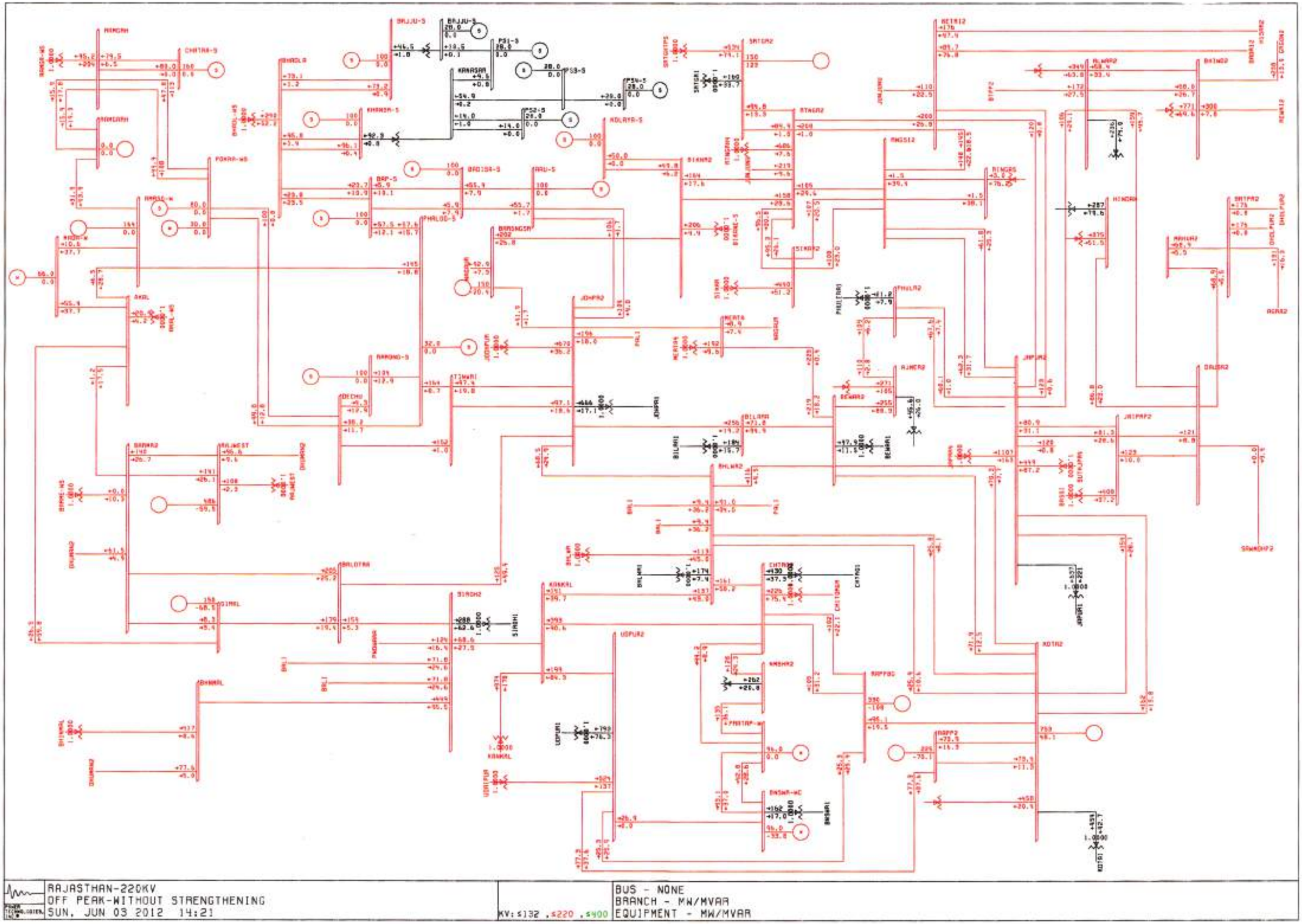
RAJASTHAN-220KV
OFF PEAK-WITHOUT STRENGTHENING
SUN, JUN 03 2012 14:21
KV: ≤132 ,≤220 ,≤400
BUS - NONE
BRANCH - MW/MVAR
EQUIPMENT - MW/MVAR

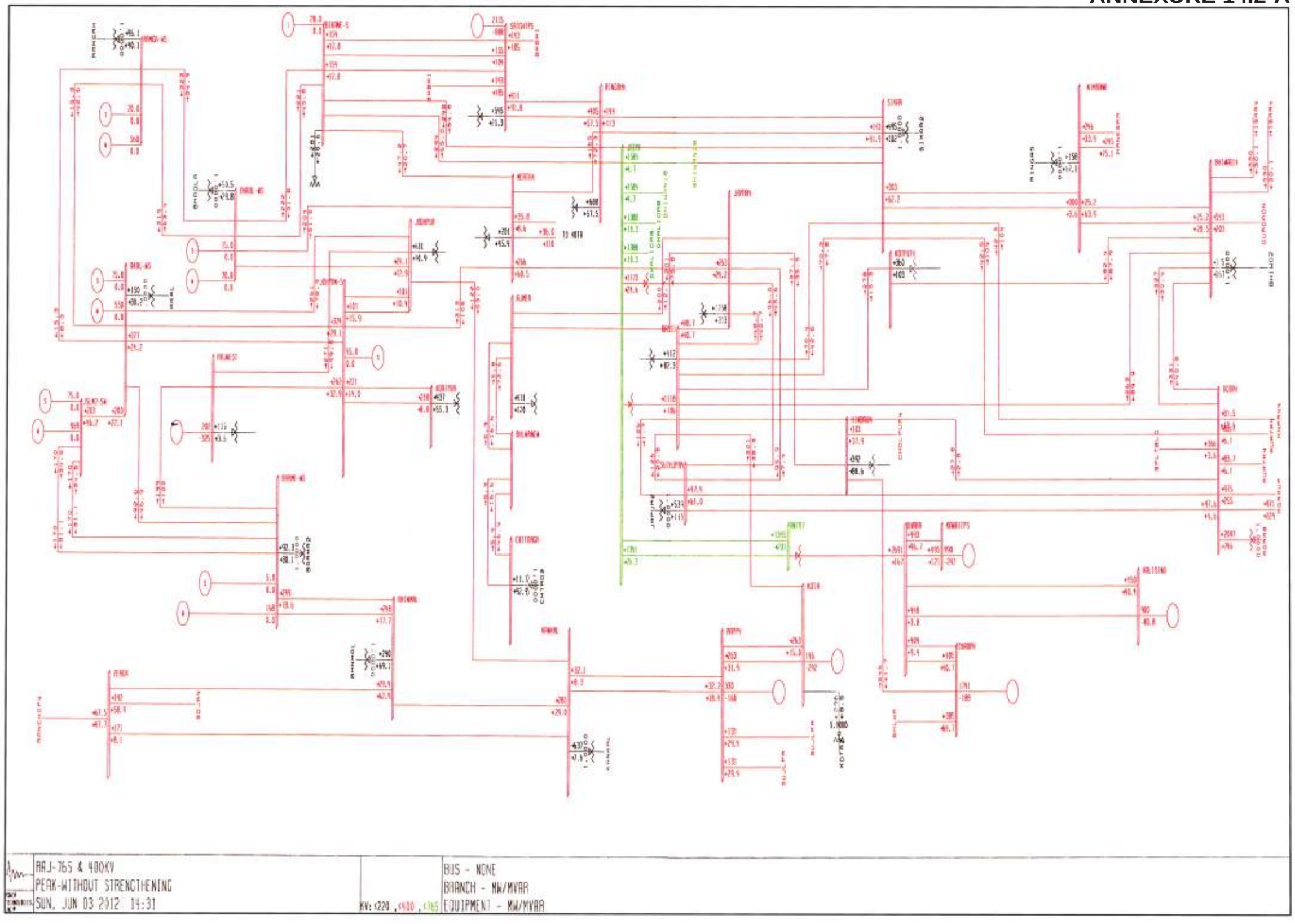
AAJ-765 & 400KV
PEAK-WITHOUT STRENGTHENING
SUN, JUN 03 2012 14:31
KV: ≤220 , ≤400 , ≤765
BUS - NONE
BRANCH - MW/MVAR
EQUIPMENT - MW/MVAR

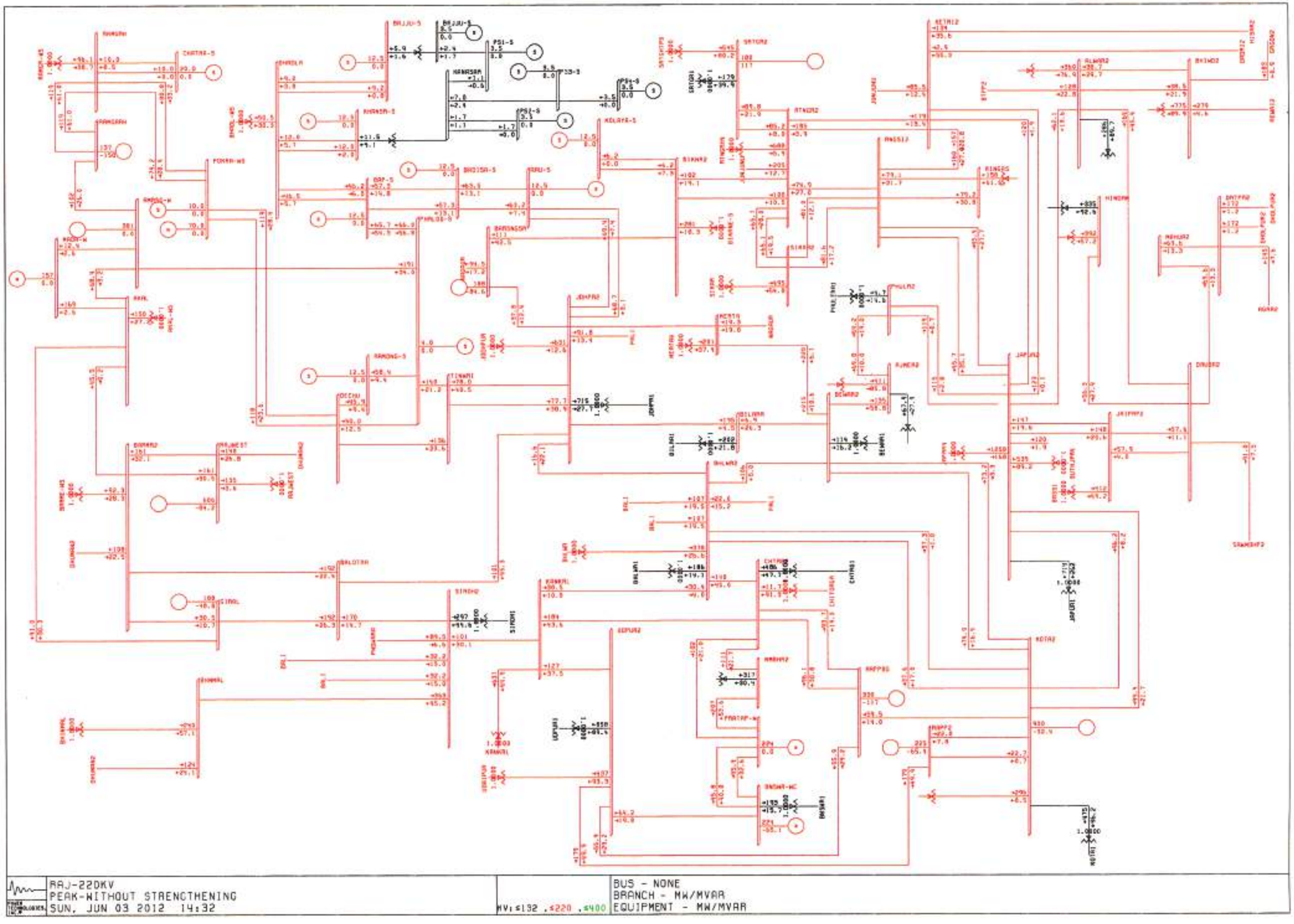
RAJ-220KV
PEAK-WITHOUT STRENGTHENING
SUN, JUN 03 2012 14:32
HV: ≤132 , ≤220 , ≤400
BUS - NONE
BRANCH - MW/MVAR
EQUIPMENT - MW/MVAR

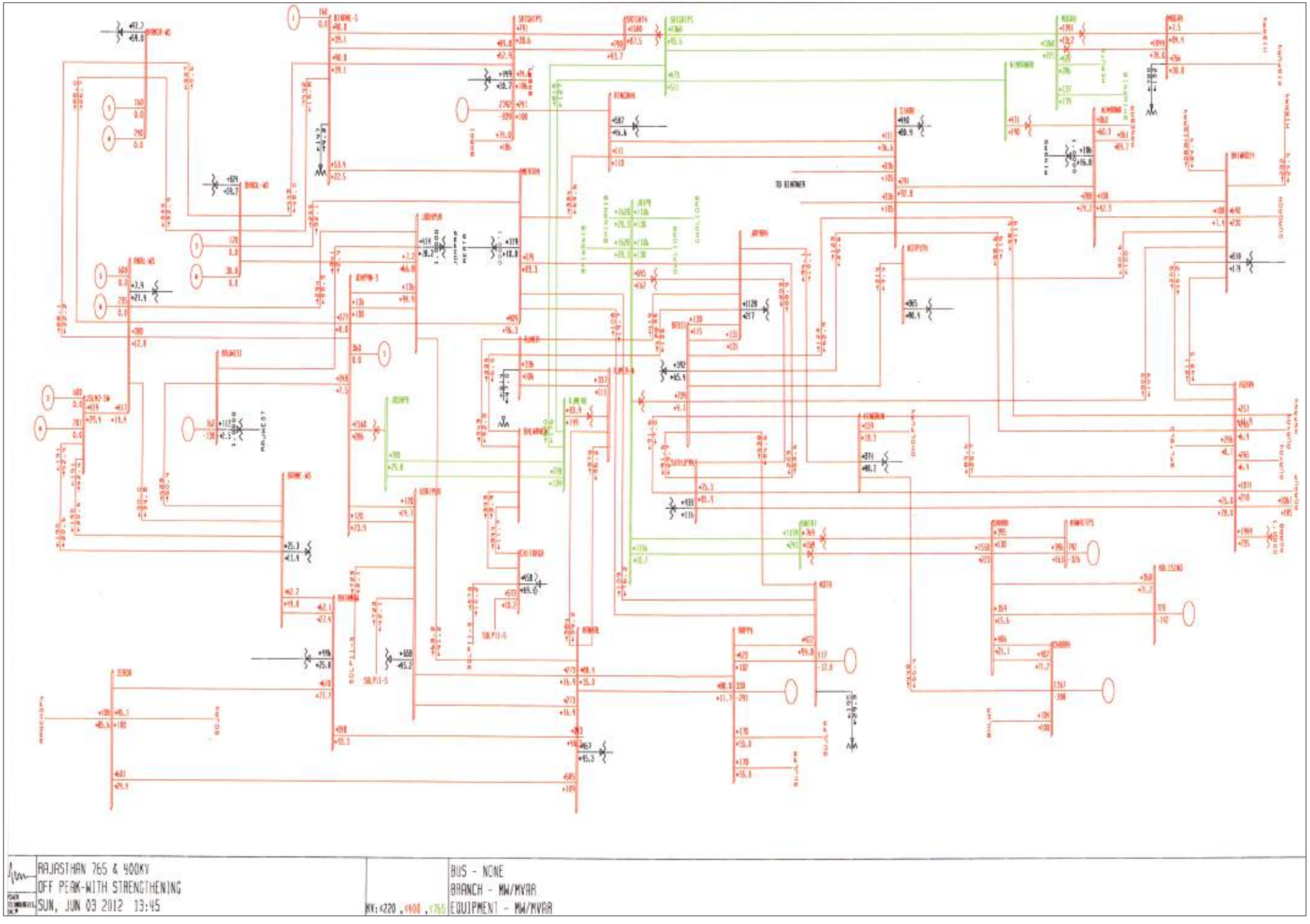
RAJASTHAN 765 & 400KV
OFF PEAK-WITH STRENGTHENING
SUN, JUN 03 2012 13:45
KV:<220 ,<400 ,<765
BUS - NONE
BRANCH - MW/MVAR
EQUIPMENT - MW/MVAR

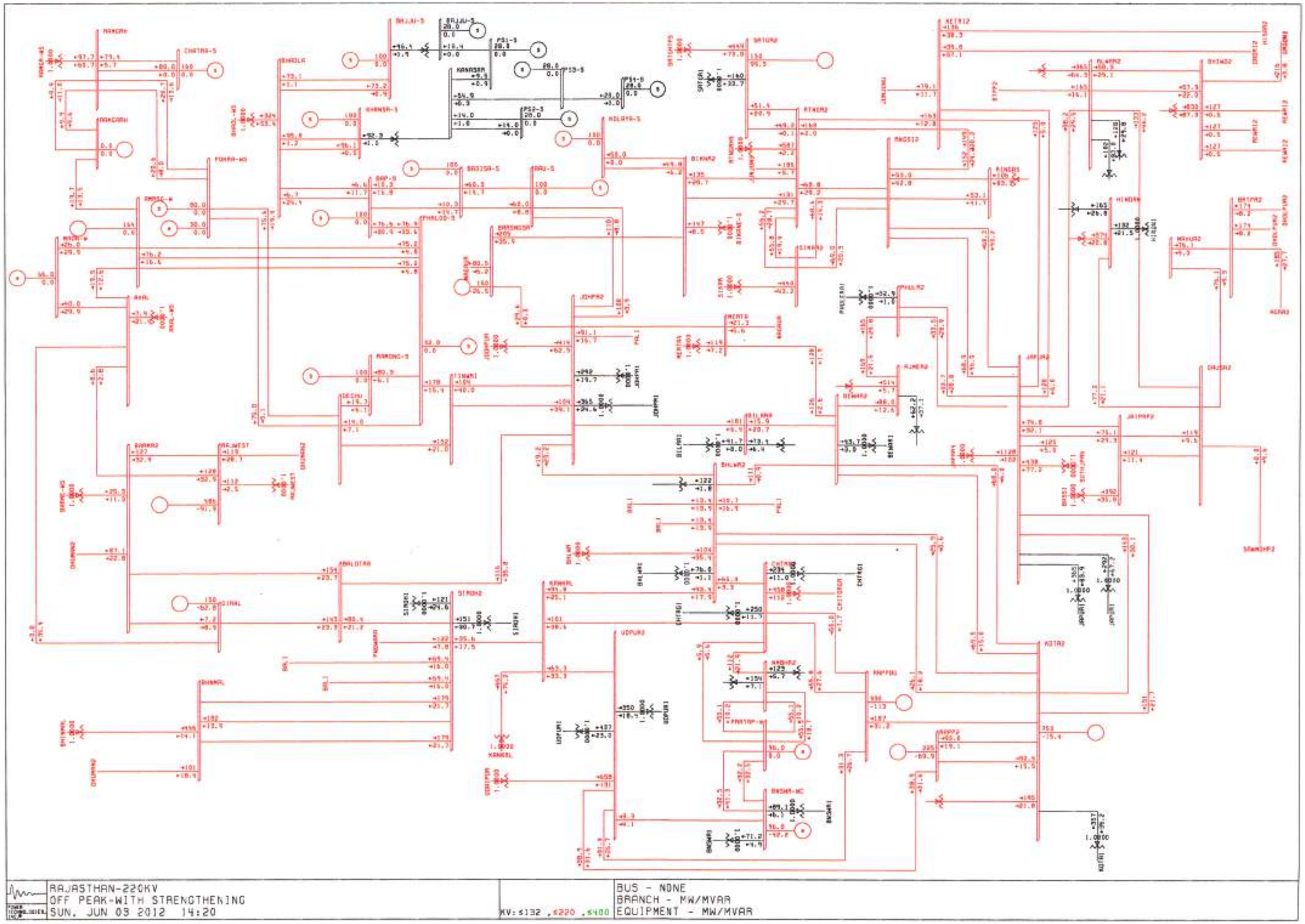
RAJASTHAN-220KV
OFF PEAK-WITH STRENGTHENING
SUN. JUN 03 2012 14:20
KV: ≤132 , ≤220 , ≤400
BUS - NONE
BRANCH - MW/MVAR
EQUIPMENT - MW/MVAR

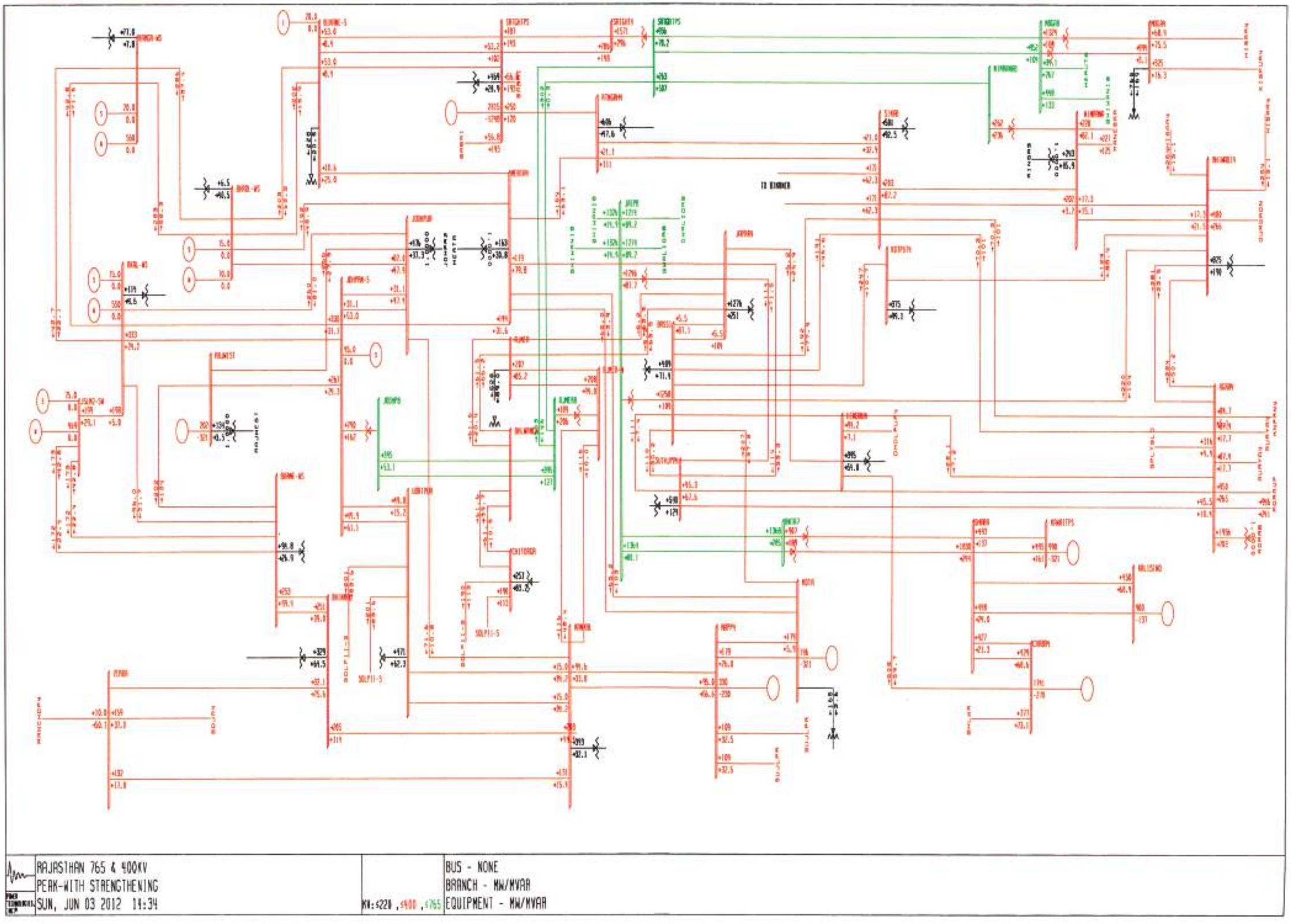
RAJASTHAN 765 & 400KV
PEAK-WITH STRENGTHENING
SUN, JUN 03 2012 14:34
KV:&220 ,&400 ,&765
BUS - NONE
BRANCH - MW/MVAR
EQUIPMENT - MW/MVAR

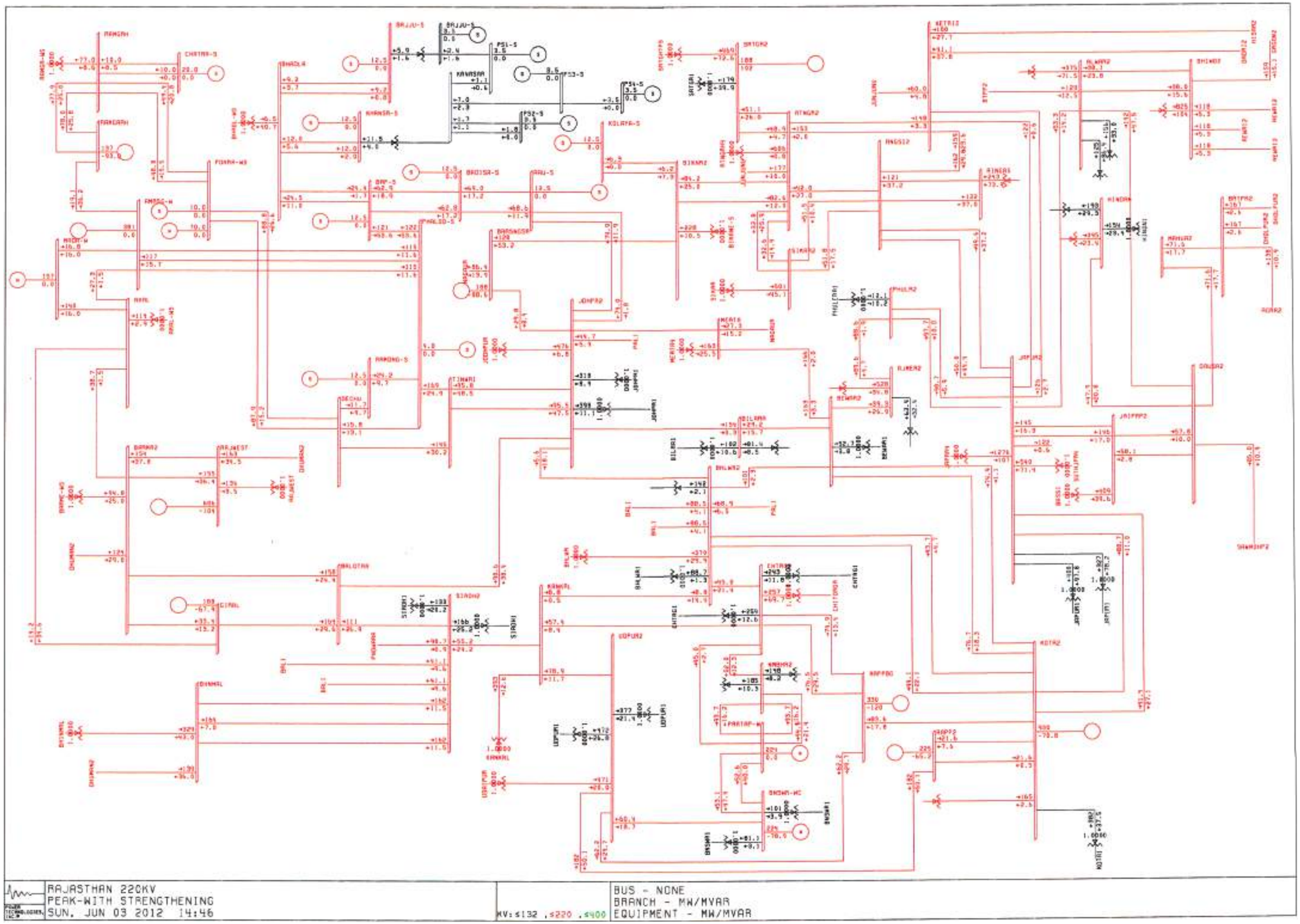
RAJASTHAN 220KV
PEAK-WITH STRENGTHENING
SUN, JUN 03 2012 14:46
KV: ≤132 ,≤220 ,≤400
BUS - NONE
BRANCH - MW/MVAR
EQUIPMENT - MW/MVAR

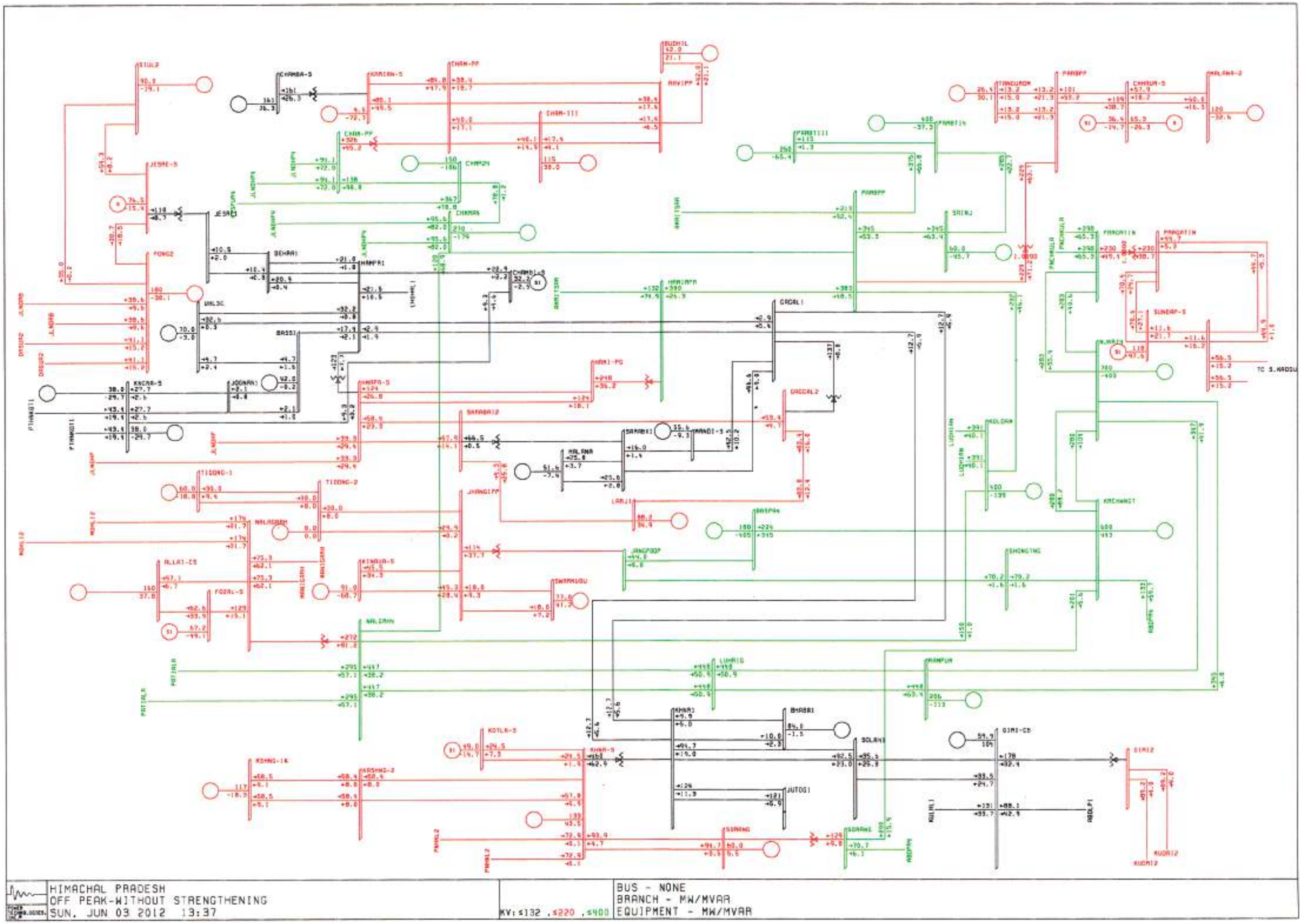
HIMACHAL PRADESH
OFF PEAK-WITHOUT STRENGTHENING
SUN. JUN 03 2012 13:37
KV: ≤132 ,≤220 ,≤400
BUS - NONE
BRANCH - MW/MVAR
EQUIPMENT - MW/MVAR

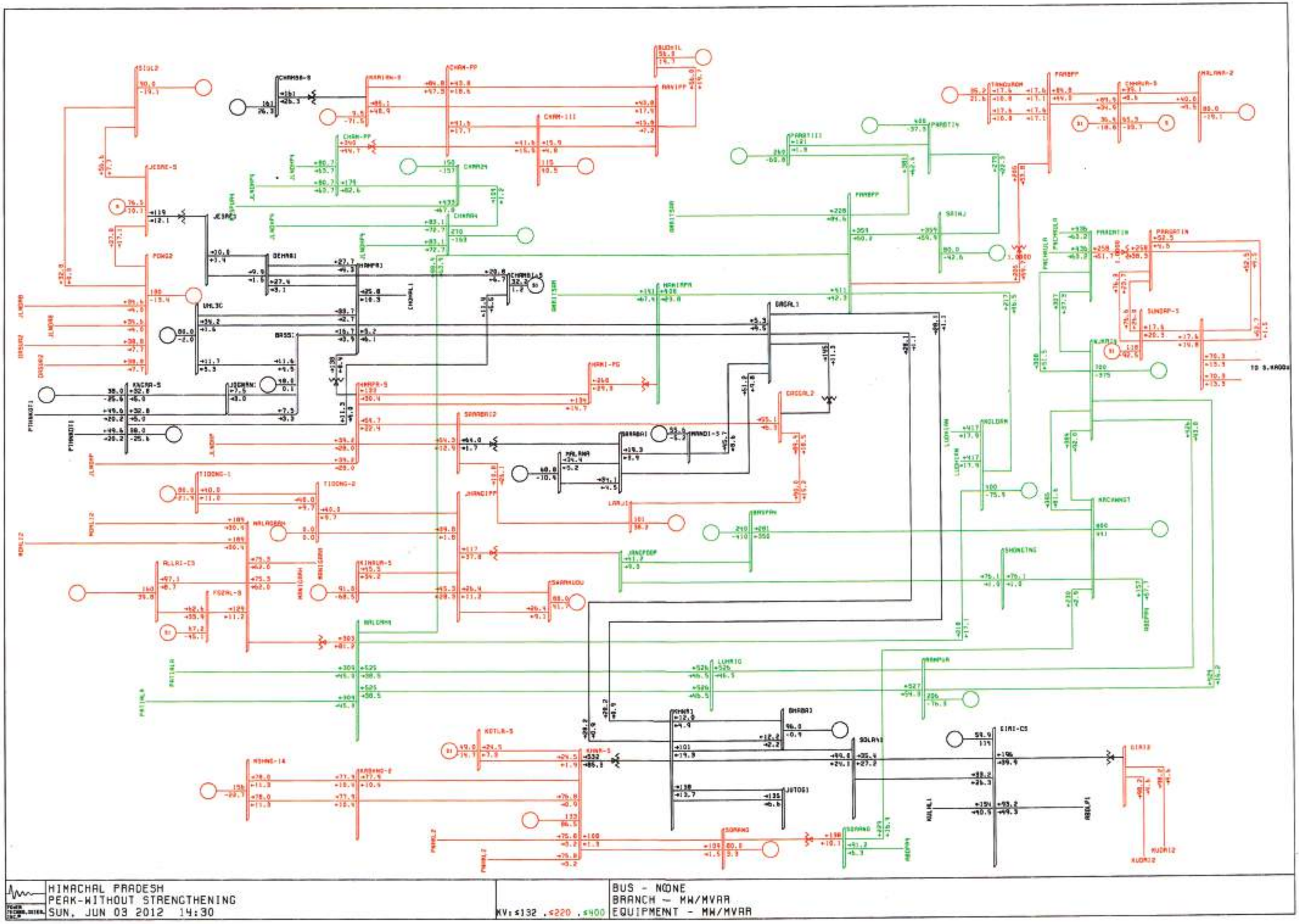
HIMACHAL PRADESH
PEAK-WITHOUT STRENGTHENING
SUN, JUN 03 2012 14:30
KV: ≤132 , ≤220 , ≤400
BUS - NONE
BRANCH - MW/MVAR
EQUIPMENT - MW/MVAR

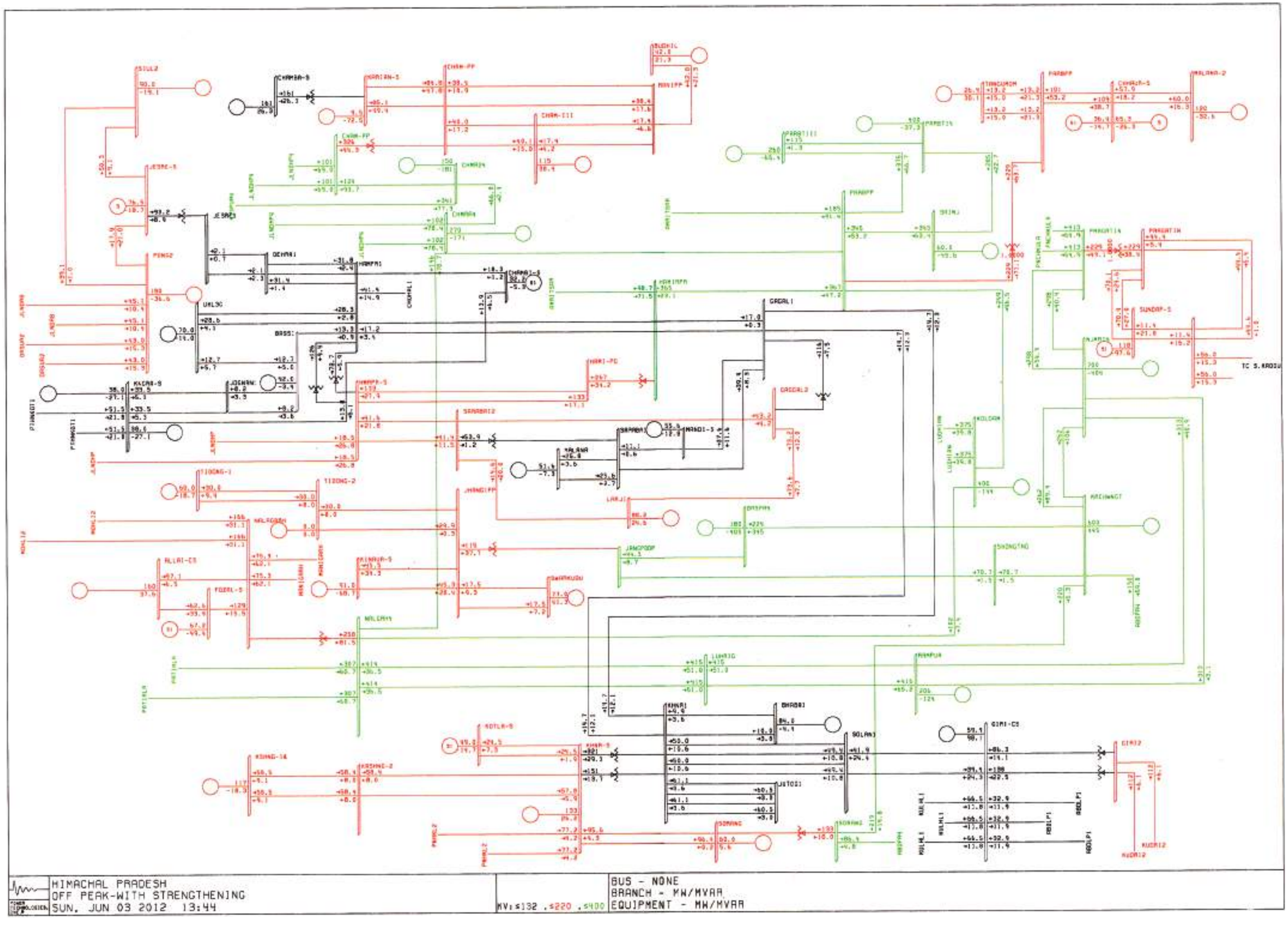
HIMACHAL PRADESH
OFF PEAK-WITH STRENGTHENING
SUN, JUN 03 2012 13:44
KV: ≤132 , ≤220 , ≤400
BUS - NONE
BRANCH - MW/MVAR
EQUIPMENT - MW/MVAR

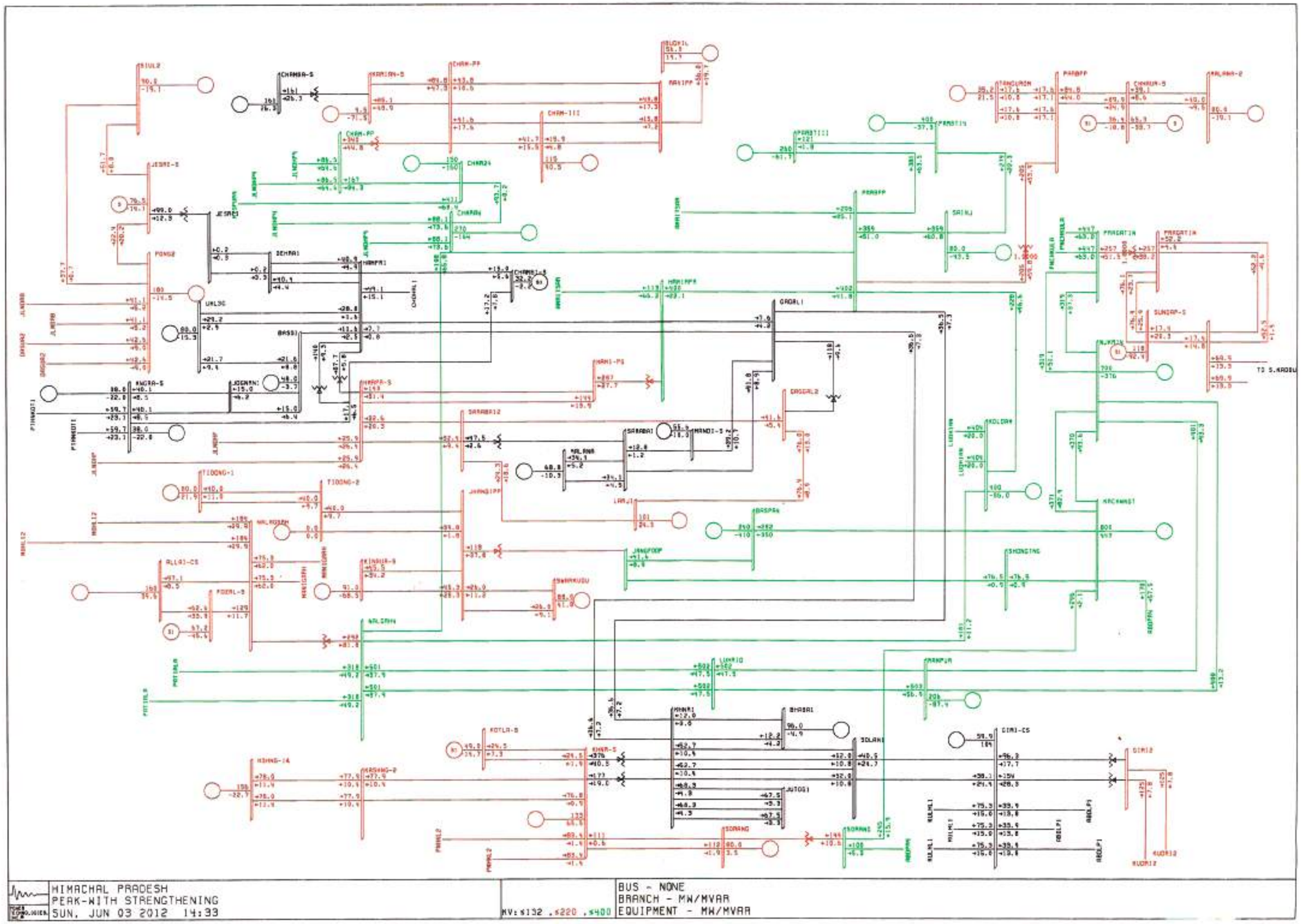
HIMACHAL PRADESH
PEAK-WITH STRENGTHENING
SUN, JUN 03 2012 14:33
BUS - NONE
BRANCH - MW/MVAR
EQUIPMENT - MW/MVAR

ANNEXURE-15.5 A

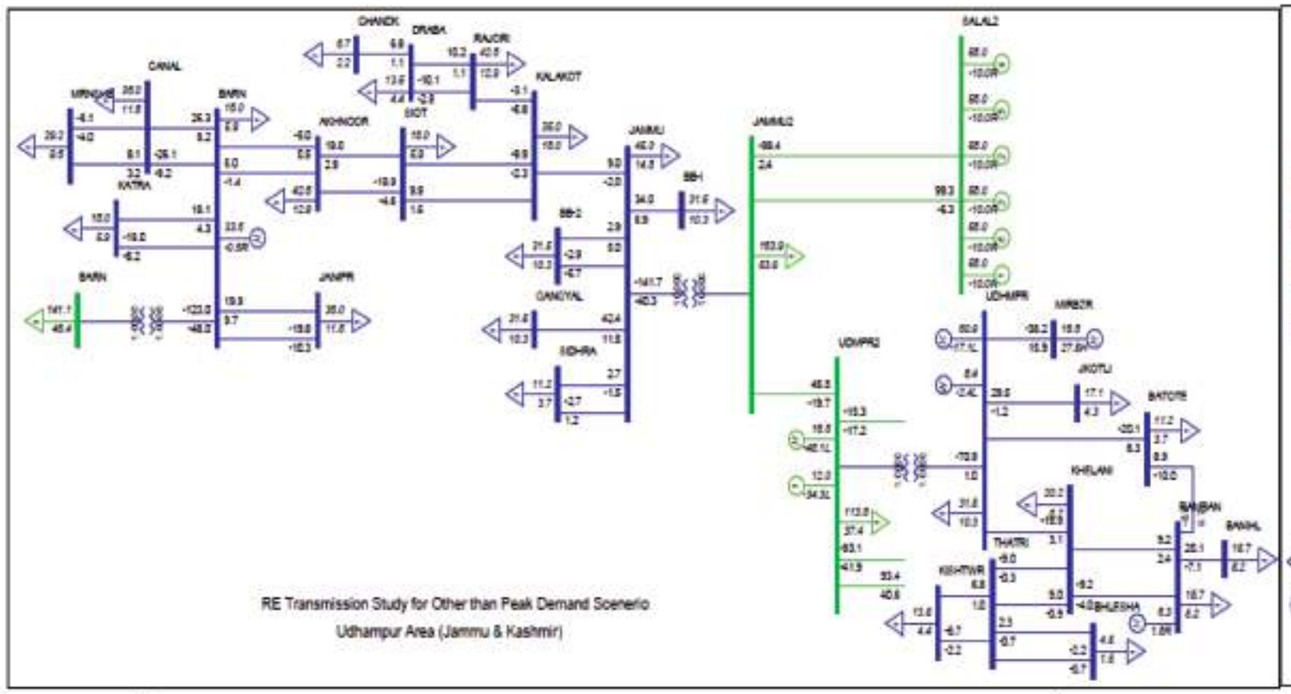

RE Transmission Study for Other than Peak Demand Scenerio
Udhampur Area (Jammu & Kashmir)

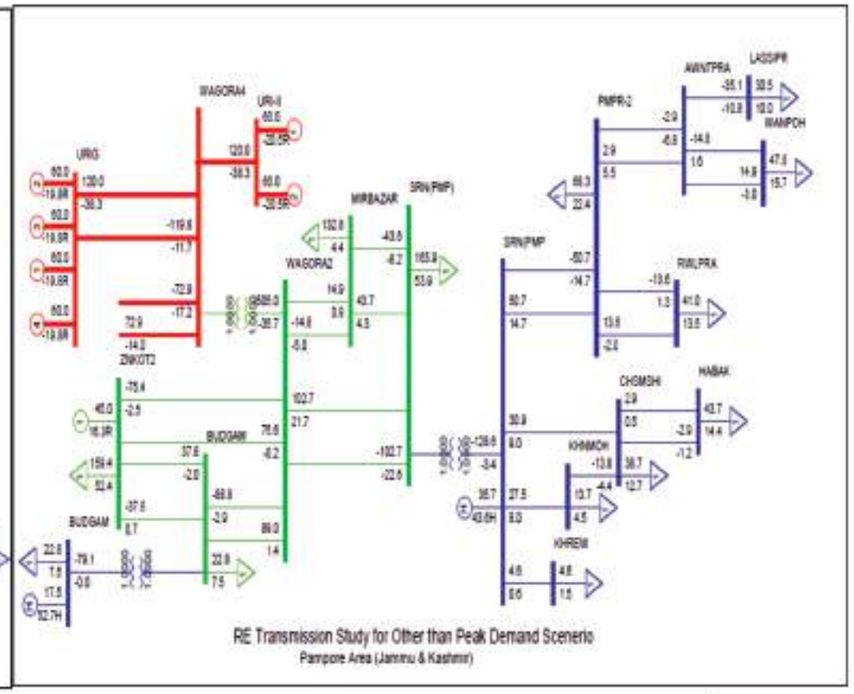

RE Transmission Study for Other than Peak Demand Scenerio
Pampore Area (Jammu & Kashmir)

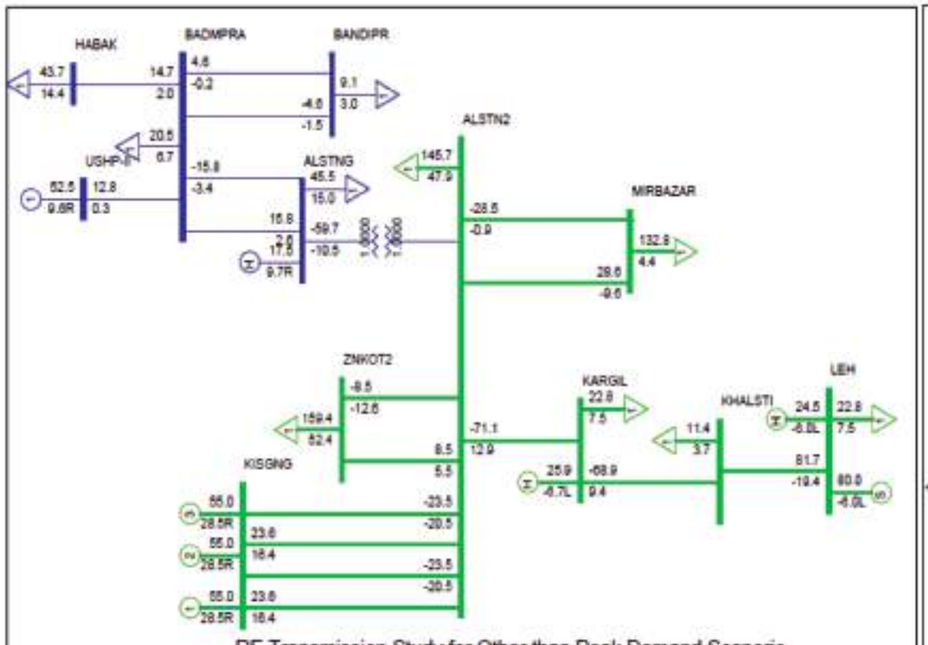

RE Transmission Study for Other than Peak Demand Scenerio
Alistang Area (Jammu & Kashmir)

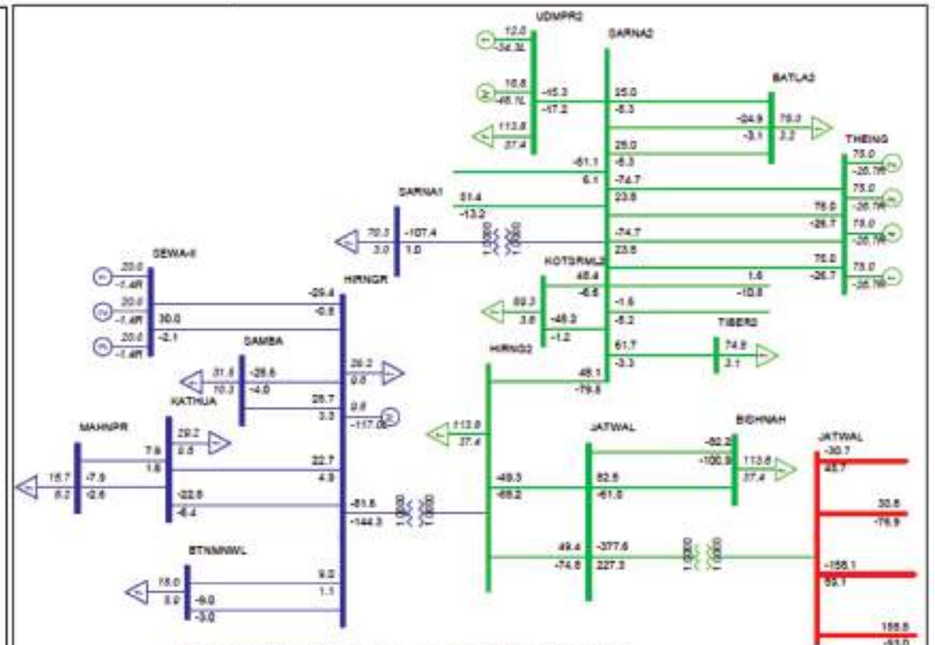

RE Transmission Study for Other than Peak Demand Scenerio
Hiranagar Nagar Area (Jammu & Kashmir)

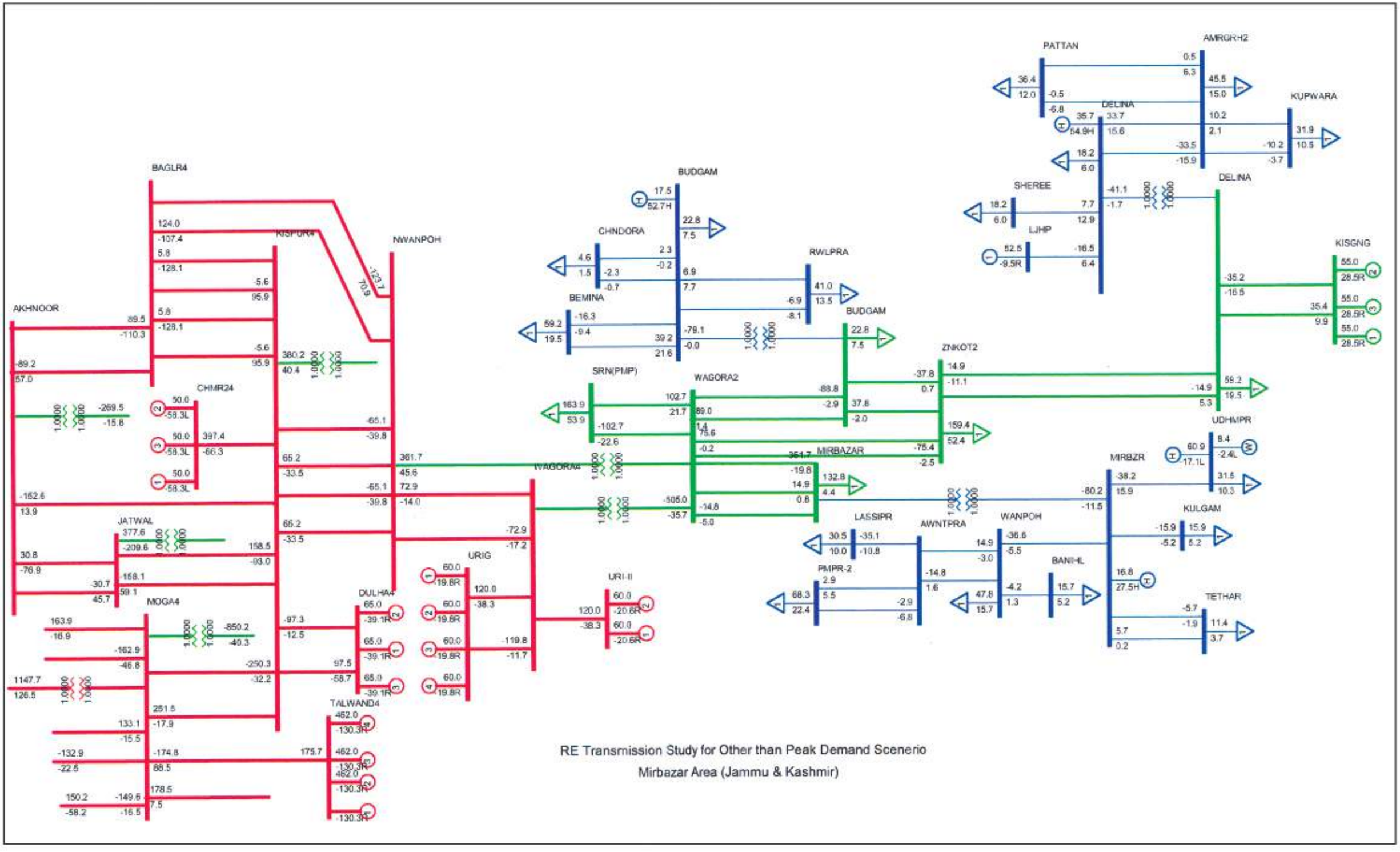

RE Transmission Study for Other than Peak Demand Scenerio

Mirbazar Area (Jammu & Kashmir)

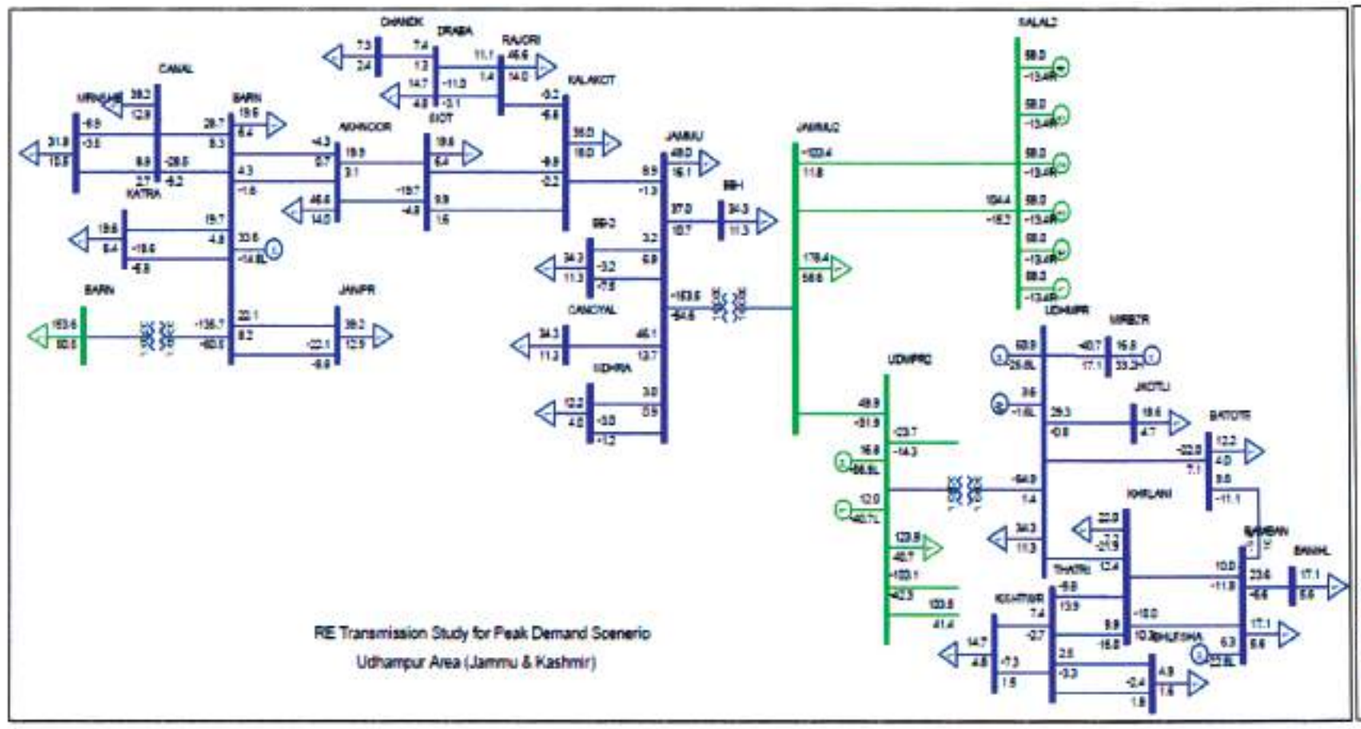
CANAL
BARN
KATRA
JANPR
CHANDK
DRABA
RAJORI
KALAKOT
AKHNOOR
JAMMU
SIDH
CANOYAL
KIDHRA
JAMMU2
KALAL2
UDHMPR
MIRBZR
JAKTLI
BATOTE
KHRLANI
KISHTWR
BHLESWA
BANIHL
RE Transmission Study for Peak Demand Scenerio
Udhampur Area (Jammu & Kashmir)

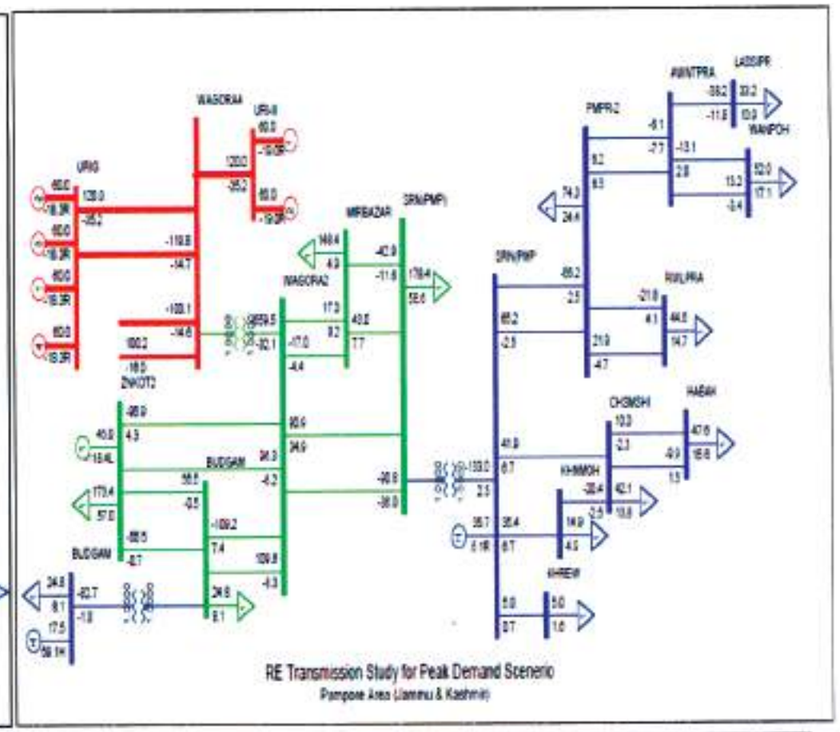
WAGORA4
URI
MIRBAZAR
SRNPMP
WAGORA2
ZNKOT2
BUDGAM
PMPR2
AVNTPRA
LADSPR
WANPOH
RAJPRA
CHGMSH
HABAK
KHMMOH
KHREW
RE Transmission Study for Peak Demand Scenerio
Pampore Area (Jammu & Kashmir)

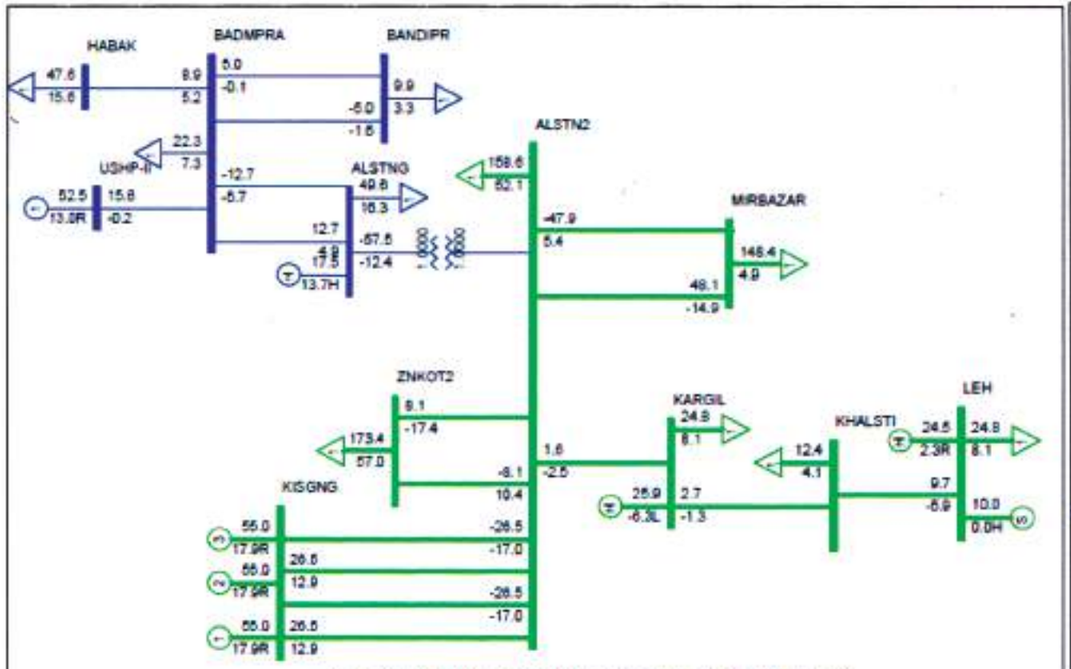
HABAK
BADMPRA
BANDIPR
USHP-II
ALSTNG
ALSTN2
MIRBAZAR
ZNKOT2
KISGNG
KARGIL
KHALSTI
LEH
RE Transmission Study for Peak Demand Scenerio
Alistang Area (Jammu & Kashmir)

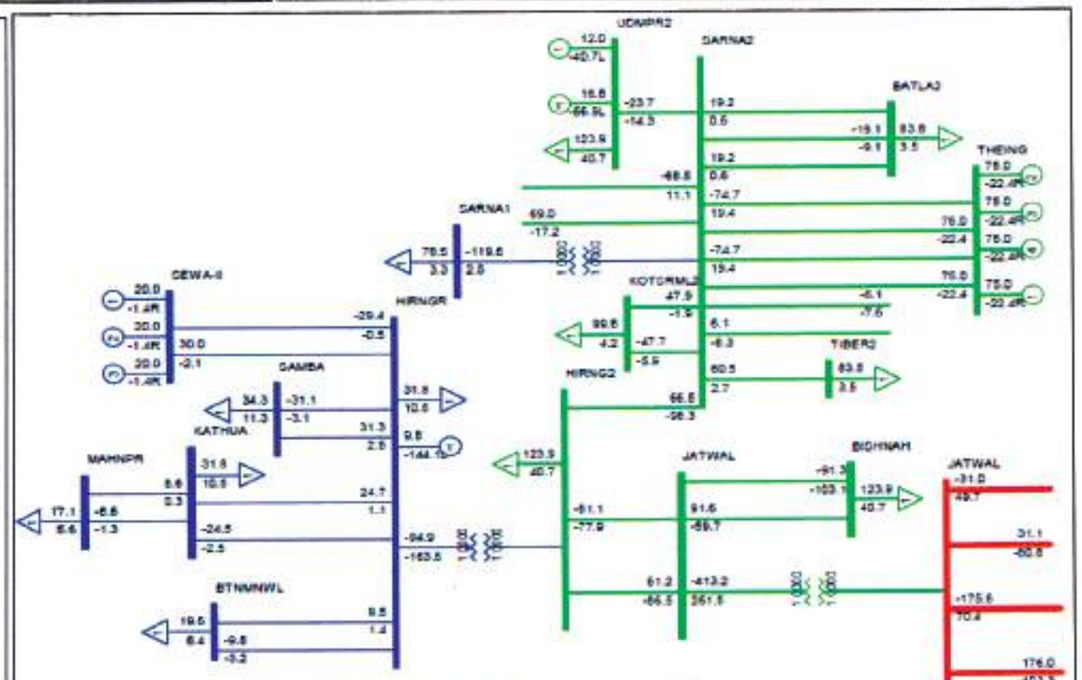
UDMPR2
DARNA2
BATLA2
THEING
DARNA1
HIRNGR
GEWA-II
KOTORMLI
TIBER2
GAMBA
KATHUA
HIRNG2
MAHNPR
JATWAL
BIGHNAH
BTNMNWL
RE Transmission Study for Peak Demand Scenerio
Hiranagar Nagar Area (Jammu & Kashmir)

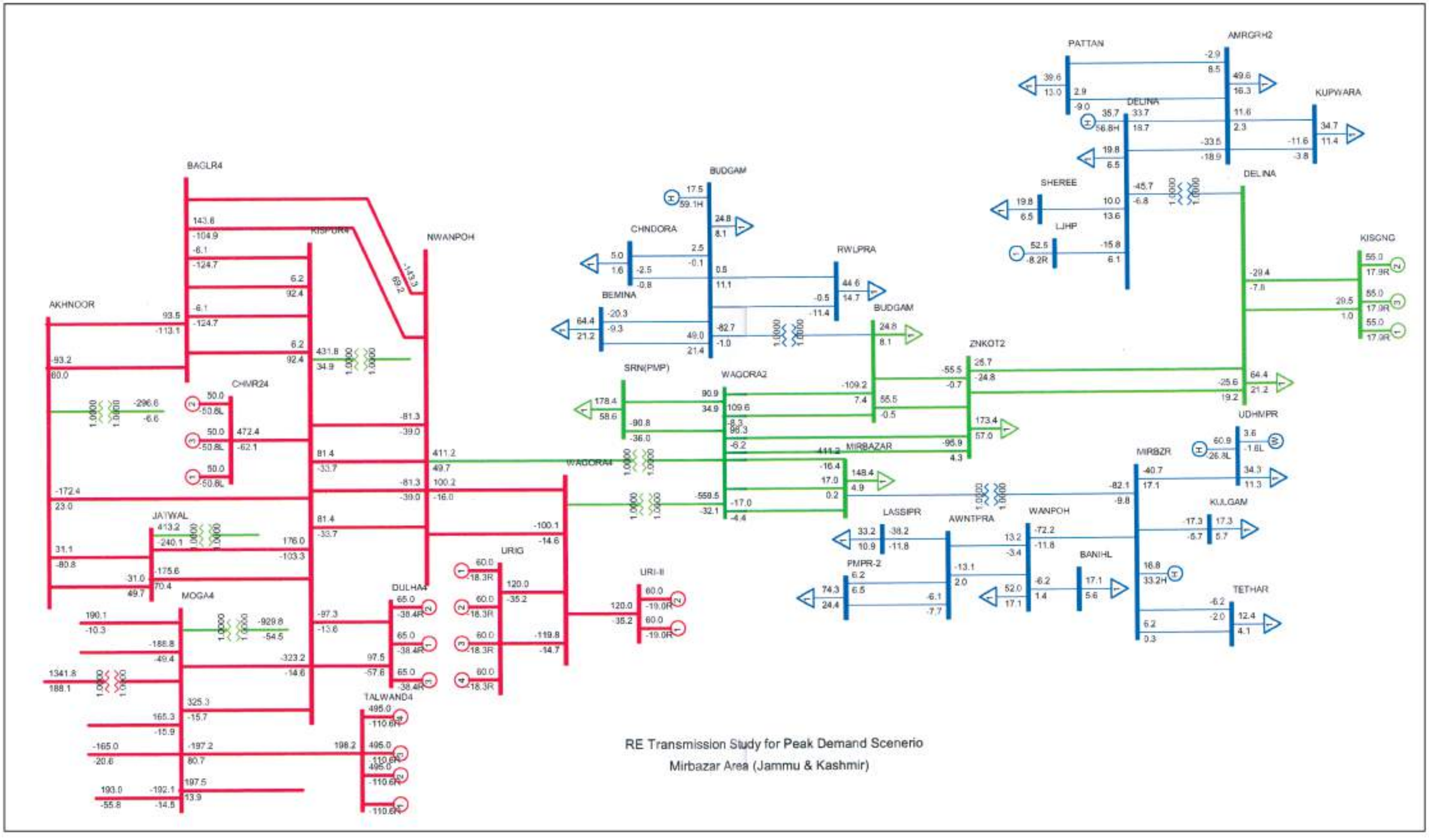

RE Transmission Study for Peak Demand Scenerio

Mirbazar Area (Jammu & Kashmir)

Annexure-16

STATUS OF PUMPED STORAGE PLANTS

Project	State	No. of UnitsxMW	Capacity (MW)	Design Energy (MU)	Year of Commissioning	Comment
Kadana	Gujarat	4 x 60	240	518	1990-98	Not being operated in Pumped Mode
Sardar Sarovar	Gujarat	6 x 200		–	2002-05	Not being operated in Pumped Mode
Bhira	Maharashtra	1 x 150		790	1994-95	Not being operated in Pumped Mode
Nagarjuna Sagar	Andhra Pradesh	1 x 110÷7 x 100.8		2237	1978-85	Not being operated in Pumped Mode
Srisalam LBPH	Andhra Pradesh	6 x 150		1400	2000-04	Not being operated in Pumped Mode
Kadamparai	Tamil Nadu	4 x 100		77	1987-88	Not being operated in Pumped Mode
Panchet & Extn	DVC	2 x 40		237	1952-53	Not being operated in Pumped Mode
Purulia	West Bengal	3 x 225		319	2007-08	Recently Commissioned

MSPGCL also have Ujjani (12 MW), Paithan (12 MW) & Ghatghar (2x125 MW) PSP Plants

#Source- MSPGCL petition (case no 94/2007) before MERC

Annexure- 17

Role and Responsibilities of Developer/ DISCOM/STU/SLDC (in addition to statutory responsibilities already provided in Electricity Act 2003, Grid Codes)

Generation Developer

- Forecast their generation at different time horizons and provide the data to REMC/SLDC
- To Set up scheduling infrastructure and mechanism to schedule the various transactions under PPAs or Long/Medium/Short Term Open Access in Inter-State or intra-State transmission system. The Developer shall also revise these transactions based on the forecast, as per the State/Central Grid Code
- Develop all SCADA infrastructure for Real Time data transmission from the wind farms to the SLDC
- The Developer shall make modifications to the WTGs as required by the State/Central Regulator from time to time. He shall comply with all technical requirements such as fault ride through characteristics, protection, earthing, PF regulation, etc as specified in the CEA's (Technical Standards in connectivity) regulations or any other orders as amended from time to time
- The Developer shall be responsible for payments and/or disbursement from/or to the State/Regional UI pool, SLDC fees charges, Data Communication charges or any other charges from time to time
- Collect and transmit the Meter readings to the concerned agencies
- The Developer shall co-ordinate with SLDC/RLDC/NLDC for any grid related matters and implement the decisions thereof.
- Developer shall discharge any other function assigned from time to time by any statutory body.

SLDC

- Avoid instructing backing down of RE generation on grounds of high frequency.
- Make all efforts to Reduce conventional energy to accommodate surplus RE generation.
- Resolve Congestion through measures such as Network re-configuration, Demand side management etc
- Interact with RLDC/Sub-LDC/ Developer Control Centre/GENCOs etc for unhindered Despatch of RE sources
- Provide Feedback on accuracy of Forecast vis à vis Actual Generation
- Real time measures on Actual Generation

- SCADA data maintenance – ensure uninterrupted data and correctness of RE generation data at various control centres.
- Play active role in Pool settlement with regard to schemes like RRF etc.
- Identify and facilitate SEM installation at various metering points
- Receive / Validate/ analyse SEM data for energy injection by RE sources
- Operational issue
- Provide Feedback to STU/RLDC/CTU to identify pockets of congestion so as to strengthen Sub-transmission/ Transmission system and planning/spinning reserves
- SLDC shall not instruct the Developer to back down generation on ground of Merit Order, but may do so only on over loading of any associated grid element or in case of threat to the system security.

STU

- Plan/Optimize the sub/Transmission System
- Monitor progress of transmission project vis-à-vis RE projects
- Facilitate Open Access on LTA/MTOA basis
- Formulate Connectivity conditions and Grid Standards in line with that of the CEA
- Formulate provisions favorable to promote RE in the State Grid Code
- Coordinate with SLDC/RLDC/CTU/RLDC/MNRE etc. for any matter related to RE.
- Collect/ verify and validate the Meter Readings at various locations and transmit to SLDC / RPC/ RLDC concerned.

DISCOM

- Provide connectivity to wind/solar at 11kV/22kV/33kV as the case may be.
- Plan and deploy Local loads to RE pockets so as to minimize the need for Transmission system.
- Provide Feedback to STU/SLDC in planning sub-transmission system.
- DISCOM shall not instruct the Developer to back down generation on ground of Merit Order, but may do so only on over loading of any associated grid element or in case of threat to the system security.
- Collect/ verify and validate the Meter Readings at various locations and transmit to SLDC / RPC/ RLDC concerned.

Annexure-18

Automatic Weather Stations			
State	Area	Surface AWS Total (nos)	AWS on Hub height Towers (nos)
Tamilnadu	Rasipalayam	18	9
	Anikadavu	16	8
	Thappagundu	21	10
	Kayathar	52	26
	Tennempatty	21	11
	Kanarpatty	13	7
	Tirunelveli	29	14
	Vagarai	22	11
	Udumalpet	48	24
	Thutukudi	1	
	Ramanathapuram	1	
	Virudhnagar	1	
	Theni	1	
	Madurai	2	
	Sivaganga	1	
	Dindigul	1	
	Pudukottai	2	
	Karur	2	
	Coimbatore	1	
	Erode	1	
	Namakkal	1	
	Tiruchirapalli	1	
	Perambalur	1	
	Ariyalur	1	
	Cuddalore	2	
	Villupuram	1	
	Salem	1	
	Dharmapuri	1	
	Tiruvannamalai	2	
	Krishnagiri	1	
	Vellore	2	
Andhra Pradesh	Uravakonda	52	26
	Hindupur	14	7
	Kondapuram	27	13
	Ananthapur	8	4
	Kurnool	8	4
	Karimnagar	1	
	Mehabubnagar	1	
	Cuddapah	1	
Gujarat	Kachchh	56	28
	Banaskantha	12	6
	Patan	10	2
	Surendranagar	19	10
	Rajkot	35	18
	Jamnagar	21	10
	Amreli	7	4
	Ahmedabad(Virmgam)	2	0
	Junagad	1	0

Automatic Weather Stations			
State	**Area**	**Surface AWS Total (nos)**	**AWS on Hub height Towers (nos)**
Maharashtra	Nandurbar	9	5
	Dhule	18	9
	Nashik	8	4
	Amravati	4	2
	Chandrapur	2	0
	Yawatmal	2	0
	Parbhani	1	0
	Ahmadnagar	29	15
	Beed	7	4
	Pune	13	7
	Latur	4	2
	Osmanabad	4	0
	Solapur	18	9
	Sangli	42	21
	Satara	34	17
	Kolhapur	22	11
	Sindhudurg	9	5
Rajasthan	Jaisalmer	62	31
	Barmer	5	2
	Bnaswara	6	3
	Pratapgarh	6	3
	Jodhpur	2	1
	Bikaner	7	0
Karnataka	Bijapur	4	2
	Bangalkot	2	1
	Belgum	13	6
	Koppal	10	5
	Gadag	10	5
	Bellary	7	3
	Dvanagere	13	6
	Shimogha	3	1
	Chikmagalur	4	2
	Chitradurga	16	8
	Mysore	0	0
	Hassan	3	1
	Haveri	11	5
	Kolar	1	0
	Raichur	4	2
Jammu & Kashmir	Leh	1	1
		959	*451*
		1410	

ANNEXURE-19

Abstract Cost Estimate- ISTS

S.N.	Transmission Lines	Line Length (Km)	Unit Cost	Cost (Cr)
A	**Inter State**			
1	Jodhpur(New) – Ajmer 765kV D/c	175	2.85	498.75
2	Ajmer - Suratgarh 765kV D/c	340	2.85	969
3	Suratgarh-Moga 765kV D/c	225	2.85	641.25
4	Bachau (PG)- Solar Park-II (GETCO) 400kV D/c (High Cap/Quad)	140	1.85	259
5	Solar Park-II (GETCO) – Udaipur 400kV D/c (High Cap/Quad)	230	1.85	425.5
6	Solar Park-II (GETCO)– Chittorgarh 400kV D/c (High Cap/Quad)	350	1.85	647.5
7	Kankroli- Ajmer 400kV D/c	190	1.00	190
8	400kV Kankroli- Udaipur D/c line	60	1.00	60
9	400kV Ajmer(existing)- Ajmer(New) D/c line	20	1.00	20
10	400kV Suratgarh(existing)- Suratgarh(New) D/c line	20	1.00	20
11	New Pugalur - Udumalpet 400 kV D/c line	100	1.00	100
12	New Pugalur - Vagarai 400 kV D/c (Quad)	65	1.85	120.25
13	New Pugalur - Pugalur 400 kV D/c (Quad)	20	1.85	37
14	LILO of 765 kV Tuticorin Pool - Salem at New Pugalur (initially operated at 400 kV)	30	1.60	48
15	New Pugalur - Hyderabad HVDC Bipole of +/- 500 kV, 2500 MW	800	1.50	1200
16	Srisailam - Kurnool New 400 kV D/c	105	1.00	105
17	New Hyderabad-Hyderabad 400kV (Quad)	20	1.85	37
18	Augmentation of 765/400kV transformation capacity by 2x1500 MVA at Kolhapur	2	50.00	100
19	Augmentation of 765/400kV transformation capacity by 2x1500 MVA at Narendra	2	50.00	100
20	2x1500 MVA, 765/400kV transformer at Jodhpur-New	2	50.00	100
21	2x1500 MVA, 765/400kV transformer at Ajmer	2	50.00	100
22	2x1500 MVA transformer at Suratgarh	2	50.00	100
23	1x1500 MVA, 765/400kV ICT augmentation at Moga	1	50.00	50.00
24	New Pugalur & Mailaram Bipole HVDC station	1	1600.00	1600
25	1X500 MVA, 400/220 kV ICT augmentation at Moga	1	9.00	9.00
26	50MVAR Line Reactor	8	4.00	32
27	80MVAR Line Reactor (Switchable)	4	4.00	16
28	1x125 MVAR, 420kV Bus Reactor each at Salem, Hosur & Kurnool New	3	4.00	12
29	240MVAR B/R (Narendra, Kolhapur, Jodhpur, Ajmer & Suratgarh)	5	13.00	65
30	240MVAR Line reactor (Switchable)	10	13.00	130
31	330MVAR Line reactor (Switchable)	4	13.00	52
32	765kV Line bays	18	14.00	252
33	400kV Line bays	50	5.00	250
34	765kV Transformer Bays	11	14.00	154
35	400kV Transformer Bays	12	5.00	60
36	220 kV Transformer Bays	5	2.35	11.75
37	765kV Bus Reactor Bays	5	14.00	70
38	400kV Bus Reactor Bays	3	5.00	15
	Sub Cost (Cr)			***8657.00***
		IDC	***18%***	***1558.26***
	Total Cost ISTS (Cr)			***10215.26***
B	**PMU/PDC**			
	PMU including GPS & mounting Panel	32	0.10	3.2
	PDC including workstation, operator console & printers, panels	2	1.00	2
	Cost (Cr)			***5.2***
	IDC		***18%***	*0.936*
	Sub Total			***6.136***
C	**Communication System**			
	FO Length-OPGW (km)	2400	0.0225	54
	Terminal Equipment (STM-16 SDH) (2Gbps)	20	0.075	1.5
	Cost (Cr)			***55.5***
	IDC		***18%***	*9.99*
	Sub Total			***65.49***

ANENXURE-20

Abstract Cost Estimate- Tamilnadu Strengthening for RE

S.No.	Transmission System	Line Length (Km)	Unit Cost	Cost (Cr)
A	**Intra State - TANTRANSCO Proposed**			**2583.5**
B	**TANTRANSCO Proposed [Considered for conveyance for ISTS transfer]**			
1	Establishment of 400/230kV, 3 x 315 MVA Karaipatty Substation in Tirunelveli area including 2 Nos. of 400 kV bay extension at Tirunelveli (PGCIL) 400 kV Substation			102.81
2	Karaipatti - Tirunelveli (PGCIL) 400kV D/c (Quad)	15		40.54
3	Karaipatti - Kayathar 400kV D/c	15		15.15
	Total			***158.5***
C	**Strengthening within State for conveyance of ISTS transfer**			
1	Kayathar - TT Auto 230 kV D/C	15	0.65	9.75
2	Veeranam - Thirumalvali 230 kV D/C	55	0.65	35.75
3	Veeranam - Kadikurichi 230 kV D/C	10	0.65	6.5
4	DK Manadapam - Thudiyalur 230 kV D/C	28	0.65	18.2
5	Ingur - Thiruppur 230 kV D/C	20	0.65	13
6	Arasur - M.C. Patty 230 kV D/C	30	0.65	19.5
7	Arasur - Thiruppur 230 kV D/C	20	0.65	13
8	Sembatti - Madurai 230 kV D/C	40	0.65	26
9	Samugaranagapuram – Karaipatty 230 kV D/C	55	0.65	35.75
10	Samugaranagapuram – Khayathar 230 kV D/C	55	0.65	35.75
11	Manamthai - Karaipatti 230 kV D/C	25	0.65	16.25
12	Valliyoor - Khayathar 230 kV D/C (AI 56)	140	1.00	140
13	Kumarpuram - Karaipatty 230 kV D/C	30	0.65	19.5
14	Cuddlore – Nyveli 230 kV D/C	40	0.65	26
15	Villupuram – Nyveli 230 kV D/C	57	0.65	37.05
16	Villupuram – Sokoil 230 kV D/C	130	0.65	84.5
17	Kayathar - Tennampatty 400 kV D/c line (Quad)	15	1.85	27.75
18	Thappagundu – Anikadavu 400 kV D/C	125	1.00	125
19	LILO of Thoppagundu – Anikadavu 400 kV S/c at Udumalpet	10	1.00	10
20	Udumalpet - Waganai 400 kV D/c line	40	1.00	40
21	Rasipalayam - Waganai 400 kV D/c line	100	1.00	100
22	Salem - Singarpet 400 kV D/c line	98	1.00	98
23	Salem - Rasipalayam 400 kV D/c line	200	1.00	200
24	400 kV Bays for Transformer	23	5.00	115
25	230 kV Bays for Transformer	35	2.35	82.25
26	110 kV Bays for Transformer	34	1.60	54.4
27	230kV Line bays	64	2.35	150.4
28	400kV Line bays	24	5.00	120
29	Augmentation of 230/110 kV transformation capacity at Sembatti by 2x100 MVA	2	3.00	6
30	Augmentation of 230 / 110 kV transformation capacity at Anuparkulam by 2x100 MVA	2	3.00	6
31	Augmentation of 230 / 110 kV transformation capacity at Cuddalore by 2x100 MVA	2	3.00	6
32	Augmentation of 230 / 110 kV transformation capacity at Pudukottai by 2x150 MVA	2	4.00	8
33	Augmentation of 230 / 110 kV transformation capacity at Thiruvannamalai by 2x150 MVA	2	4.00	8
34	Augmentation of 230 / 110 kV transformation capacity at Villupuram by 2x100 MVA	2	3.00	6
35	3 x 100 MVA, 230 kV Manamthai S/S	3	3.00	9
36	3 x 100 MVA 230 kV Valliyoor S/S	3	3.00	9
37	3 x 150 MVA 230 kV Samugaranagapuram S/S	3	4.00	12
38	2 x 100 MVA 230 kV Kumarapuram S/S	2	3.00	6
39	4 x 315 MVA, 400/230 kV Tennampatty S/s	4	9.00	36
40	4 x 200 MVA , 400/110 kV Thappagundu S/s	4	7.00	28
41	2 x 315 MVA 400/230 kV Anikadavu S/s	2	9.00	18
42	400/110 kV, 2 x 200 MVA Anikadavu S/s	2	7.00	14
43	2 x 315 MVA, 400/230 kV Rasipalayam S/s	2	9.00	18
44	3 x 200 MVA, 400/110 kV Rasipalayam S/s	3	7.00	21
45	4 x 315 MVA, 400/230 kV Waganai S/s	4	9.00	36
46	3 x 200 MVA, 400/110 kV Waganai S/s	2	7.00	14
47	1x150 MVAR, 420kV Controlled Bus Reactor (TCR) each at Rasipalayam & Tappagundu	2	25.00	50
48	400kV bays for Bus reactor	2	5.00	10
	Sub Cost (Cr)			1982.3
	IDC	18%		356.814
	Total			***2339.11***
	Grand Total (B+C)			***4922.61***
D	**PMU/PDC**			
1	PMU including GPS & mounting Panel	250	0.10	25.0
2	PDC including workstation, operator console & printers, panels	2	1.00	2
	Cost (Cr)			27.0
	IDC	18%		4.86
	Sub Total			***32.87***
E	**Communication System**			
1	FO Length-OPGW (km)	1400	0.0225	31.5
2	Terminal Equipment (STM-16 SDH) (2Gbps)	154	0.075	11.55
	Cost (Cr)			43.05
	IDC	18%		7.749
	Sub Total			***50.80***
F	**Connectivity Transmission System**			
1	132kV lines	1420	0.50	710
2	230kV line	830	0.65	539.5
3	132kV Line bays	142	1.60	227.2
4	230 kV Line Bays	36	2.35	84.6
5	230/33 kV 100 MVA transformer	20	3.50	67
6	132/33 kV 50 MVA transformer	58	3.00	174
7	230kV transformer bays	29	2.35	68.15
8	132kV transformer bays	88	1.60	140.8
9	33kV transformer bays	117	0.50	58.5
10	Establishment cost of PCC	32	4.00	128
	Cost (Cr)			2226.75
	IDC	18 %		397.29
	Total			***2624***

ANENXURE-21

Abstract Cost Estimate- Andhra Pradesh Strengthening for RE

S.No.	Transmission System	Line Length (Km)	Unit Cost	Cost (Cr)
A	Intra State - APTRANSCO Proposed			1080.43
B	APTRANSCO Proposed (Considered for conveyance for ISTS transfer)			
1	Hindupur – Uravakonda 400kV D/c	130		152.1
2	400/220kV, 3x315 MVA Substation at Hindupur			108.43
3	400/220kV, 4x315 MVA Substation at Uravakonda			113.83
4	Pampanur Tanda - Hindupur 220kV D/c (Twin Moose)	36		103.5
5	Penukonda – Hindupur 220kV D/c (Single Moose)	50		29
6	Vajrakaru SS –Uravakonda 220kV D/c (Twin Moose)	13		14.55
7	Bommpalli SS –Uravakonda 220kV D/c (Twin Moose)	68		78.2
8	Establishment of 220/132kV, 2x100 MVA Substation at Pampanur			23.51
9	Establishment of 220/132kV, 2x100 MVA Substation at Penukonda			21.07
10	Establishment of 220/132kV, 1x100 MVA Substation at Vajrakaru			17.59
11	Establishment of 220/132kV, 1x100 MVA Substation at Bommpalli			17.59
	Total			680.57
C	Strengthening within State for conveyance of ISTS transfer			
1	Kolyandurg – Ananthpur 220 kV Double Circuit	50	0.65	32.5
2	Kurnool – Brahmakotkur 220 kV Double circuit	40	0.65	26
3	Mallaram – Shankarapalli 220 kV Double Circuit	15	0.65	9.75
4	Shankarapalli – Shapurnagar 220 kV Double Circuit	10	0.65	6.5
5	Ramagundam-S – Ramagundam-pvt 220 kV Double Circuit	30	0.65	19.5
6	Kurnool – AP Carbide 220 kV Double Circuit	20	0.65	13
7	Kodapa – Rajampet 220 kV Double Circuit	37	0.65	24.05
8	Wanaparthy – Brahmakotkur 220 kV Double Circuit	26	0.65	16.9
9	Mehaboobnagar – Bhotnagar 220 kV Double Circuit (AL59)	45	1.00	45
10	Mehaboobnagar – Jurala/kr 220 kV Double Circuit	80	0.65	52
11	Bhotnagar - Kalwakurthy 220 kV Double Circuit	16	0.65	10.4
12	400 kV Bays for Transformer	11	5.00	55
13	220 kV Bays for Transformer	21	2.35	49.35
14	110 kV Bays for Transformer	12	1.60	19.2
15	220kV Line bays	44	2.35	103.4
16	400 kV Bus Reactor Bays	2	5.00	10
17	1x150 MVAR, 420kV Controlled Bus Reactor (TCR) each at Hindupur & Kondapur	2	25.00	50
18	2 x 315 MVA, 400/220 kV ICT augmentation at Uravakonda	2	9.00	18
19	Augmentation of 400/220 kV Transformation capacity at Mehaboobnagar Substation by 3 x 315 MVA	3	9.00	27
20	Augmentation of 400/220 kV Transformation capacity at Mallaram Substation by 2 x 315 MVA	2	9.00	18
21	Augmentation of 400/220 kV Transformation capacity at Kurnool (APTRANSCO) Substation by 2 x 315 MVA	2	9.00	18
22	Augmentation of 400/220 kV Transformation capacity at Hyderabad AP Substation by 2 x 315 MVA	2	9.00	18
23	Augmentation of 220/110 kV Transformation capacity at Porumamilla Substation by 1 x 100 MVA	1	3.00	3
24	Augmentation of 220/110 kV Transformation capacity at Betamcherla Substation by 1 x 100 MVA	1	3.00	3
25	Augmentation of 220/110 kV Transformation capacity at Jammalamadugu Substation by 1 x 100 MVA	1	3.00	3
26	Augmentation of 220/110 kV Transformation capacity at Pampanur Substation by 2 x 150 MVA	2	4.00	8
27	Augmentation of 220/110 kV Transformation capacity at Thirumalajapalle Substation by 1 x 100 MVA	1	3.00	3
28	Augmentation of 220/110 kV Transformation capacity at Vajrakarur Substation by 3 x 100 MVA	3	3.00	9
29	Augmentation of 220/110 kV Transformation capacity at Bommpalli Substation by 3 x 150 MVA	3	4.00	12
	Sub Cost (Cr)			682.55
	IDC	18%		122.859
	Total			805.41
	Grand Total			1485.98
D	PMU/PDC			
1	PMU including GPS & mounting Panel	78	0.10	7.8
2	PDC including workstation, operator console & printers, panels	2	1.00	2
	Cost (Cr)			9.8
	IDC	18%		1.764
	Sub Total			11.56
E	Communication System			
1	FO Length-OPGW (km)	1400	0.0225	31.5
2	Terminal Equipment (STM-16 SDH) (2Gbps)	47	0.075	3.525
	Cost (Cr)			35.025
	IDC	18%		6.3045
	Sub Total			41.33
F	Connectivity Transmission System			
1	132kV lines	800	0.50	400
2	220kV line	450	0.65	292.5
3	132kV Line bays	80	1.60	128
4	220 kV Line Bays	20	2.35	47
5	220/33 kV 100 MVA transformer	16	3.00	48
6	132/33 kV 50 MVA transformer	49	2.00	98
7	220kV transformer bays	16	2.35	37.6
8	132kV transformer bays	49	1.60	78.4
9	33kV transformer bays	65	0.50	32.5
10	Establishment cost of PCC	17	4.00	68
	Cost (Cr)			1230
	IDC	18 %		221.40
	Total			1451.40

ANNEXURE-22

Abstract Cost Estimate- Karnataka Strengthening for RE

Sl.No.	Transmission System	Line Length (Km)	Unit Cost	Cost (Cr)
A.	**Strengthening within state for conveyance for ISTS transfer**			
1	220kV Raichur – Jurilaproya D/c	30	0.65	19.50
2	220kV Hiryur– Chitrdurga SC to DC Conversion with AAAC moose	20	0.65	13.00
3	220kV Chitradurga– Davangiri SC to DC Conversion with AAAC moose	30	0.65	19.50
4	220kV Madhugiri - Gowribidanur D/c line	35	0.65	22.75
5	220kV Chintamani – Malur D/c line	25	0.65	16.25
6	220kV Mysore – Hootgalli D/c line	25	0.65	16.25
7	220kV Somanhalli – HSR Layout D/c line	30	0.65	19.50
8	220kV Somanhalli – Yerandahalli D/c line	30	0.65	19.50
9	220kV Kushtagi-Lingasugur D/c line	60	0.65	39.00
10	220kV Shimogha- Kudermukh D/c line	100	0.65	65.00
11	220kV line Bays	36	2.35	84.60
12	1X150MVAR, 420kV Controlled Bus reactor (TCR) each at 400kV Davangiri & Hiriyur	2	25.00	50.00
13	400kV Bays for Bus Reactor	2	5.00	10.00
	Cost (Cr)			***394.85***
	IDC	***18%***		***71.07***
	Grand Total (Karnataka)			***465.92***
B.	**PMU/PDC**			
	PMU including GPS & mounting Panel	90	0.10	9.00
	PDC including workstation, operator console & printers, panels	2	1.00	2.00
	Cost (Cr)			***11.00***
	IDC		***18%***	*1.98*
	Sub Total			***12.98***
C.	**Communication System**			
	FO Length-OPGW (km)	1400	0.0225	31.50
	Terminal Equipment (STM-16 SDH) (2Gbps)	54	0.075	4.05
	Cost (Cr)			*35.55*
	IDC		***18%***	*6.40*
	Sub Total			***41.95***
D.	**Connectivity Transmission System**			
	132kV lines	580	0.50	290.00
	220kV line	315	0.65	204.75
	132kV Line bays	58	1.60	92.8
	220 kV Line Bays	14	2.35	32.9
	220/33 kV 100 MVA transformer	12	3.00	36
	132/33 kV 50 MVA transformer	35	2.00	70
	220kV transformer bays	12	2.35	28.2
	132kV transformer bays	35	1.60	56
	33kV transformer bays	47	0.50	23.5
	Establishment cost of PCC	13	4.00	52
	Cost (Cr)			***886.15***
	IDC		***18%***	*159.51*
	Total			***1045.66***

ANNEXURE-23

Abstract Cost Estimate- Gujarat Strengthening for RE

S.No.	Transmission System	Line Length (Km)	Unit Cost	Cost (Cr)
A	**Intra State -GETCO Proposed**			**1500**
B	**GETCO proposed [considered for conveyance for ISTS transfer]**			
1	Varsana - Bachau - Radhanpur 220kV D/c (AAAC moose)	191	0.70	133.7
2	220kV Line bays	8	2.35	18.8
	Sub total (Cr)			***152.5***
		IDC & Centages	***18%***	***27.45***
	Total			***179.95***
C	**Strengthening within state for conveyance for ISTS transfer**			
1	Solar Park Ph-II – Sankhari 400kV D/c	80	1.00	80
2	LILO of 400KV D/C Mundra(APL) – Zerda line at Solar Park Ph-II	10	1.00	10
3	LILO of both circuits of 220KV D/C Deodhar – Tharad line at Solar Park Ph-II	11	0.65	7.15
4	Vadavi – Chatral 220kV D/c	30	0.65	19.5
5	Radhanpur- Sankhari 220kV D/c (AL-59)	40	1.00	40
6	Amreli- Vartej 220kV D/c Line	30	0.65	19.5
7	Dharangdhara – Bala 220kV D/c	30	0.65	19.5
8	Choraniya- Salejada 220kV D/c	50	0.65	32.5
9	Sarla- Choraniya 220kV D/c (AL-59)	20	1.00	20
10	LILO of 220kV Bala –Dhamli at Adalsar	1	0.65	0.65
11	Nanikhakhar- Adani (Mundra) 220kV 2nd D/c (or reconductoring of existing line to AL59/High capacity in case of space constraints)	25	1.00	25
12	220kV 25/50 MVAR Bus Reactor at Motipaneli, Bhatia, Bachau,Deodhar, Nakhtarna	5	2.00	10.00
13	Establishment of 400/220KV, 2x315 MVA Substation at Solar Park Ph-II	1	50.00	50.00
14	1x150 MVAR, 420kV Controlled bus reactor (TCR) at 400kV Solar Park II S/s	1	25.00	25.00
15	400kV Line/Reactor bays	5	5.00	25.00
16	400kV Bays for Transformer	3	5.00	15
17	220kV Bays for Transformer	3	2.35	7.05
18	220kV Line/Reactor bays	33	2.35	77.55
19	Augmentation of 400/220kV transformation capacity at APL-Mundra by 1x315 MVA(3rd) & 2x315MVA transformer at Solar Park-II	3	9.00	27
	Sub total (Cr)			***510.4***
		IDC & Centages	***18%***	***91.872***
	Total			***602.272***
	Grand Total (B+C)			***782.22***
C	**PMU/PDC**			
	PMU including GPS & mounting Panel	94	0.10	9.4
	PDC including workstation, operator console & printers, panels	2	1.00	2
	Cost (Cr)			***11.4***
		IDC & Centages	***18%***	*2.052*
	Sub Total			***13.452***
D	**Communication System**			
	FO Length-OPGW (km)	1400	0.0225	31.5
	Terminal Equipment (STM-16 SDH) (2Gbps)	55	0.075	4.125
	Cost (Cr)			***35.625***
		IDC & Centages	***18%***	*6.4125*
	Sub Total			***42.0375***
E	**Connectivity Transmission System**			
	66kV lines	1296	0.20	259.2
	220kV line	540	0.65	351
	66kV Line bays	162	0.60	97.2
	220 kV Line Bays	24	2.35	56.4
	220/66 kV 100 MVA transformer	48	3.00	144
	220kV transformer bays	48	2.35	112.8
	66kV transformer bays	48	0.60	28.8
	Establishment cost of PCC	12	4.00	48
	Cost (Cr)			***1097.4***
		IDC & Centages	***18%***	*197.532*
	Total			***1294.932***

ANNEXURE-24

Abstract Cost Estimate- Maharashtra Strengthening for RE

S.No.	Transmission System	Line Length (Km)	Unit Cost	Cost (Cr)
A	**Strengthening within state for conveyance for ISTS transfer**			
1	220kV Valve – Dhule (D-III) D/c	30	0.65	19.5
2	Dondaicha- Dhule/Dhule(New) 220kV D/c (2nd/1st)	25	0.65	16.25
3	Jath – Ghatnandare 220kV D/c	30	0.65	19.5
4	Bhalwani – Malinagar 220kV line	30	0.65	19.5
5	Shirala-Peth 132kV D/c (2nd)	25	0.50	12.5
6	Ahmadnagar- Bhenda 220kV D/c	55	0.65	35.75
7	LILO of 220kV Kharepatan –Pawas line at Oni	10	0.65	6.5
8	Satara – Lonand 220kV D/c (High Cap)	45	1.00	45
9	LILO of 220kV Karad- K-III & K-1&2 one line at Malharpeth	4	0.65	2.6
10	Chinchwad - Chakan 220kV D/c (2nd)	20	0.65	13
11	Chinchwad - Urse 220kV line (2nd)	25	0.65	16.25
12	LILO of 220kV Chinchwad- Theur at Parvati	1	0.65	0.65
13	Bhenda 220/132kV,160 MVA ICT (2nd)	1	4.00	4
14	Peth 220/132kV,160 MVA ICT (2nd)	1	4.00	4
15	Solapur 220/132kV,160 MVA ICT (4th)	1	4.00	4
16	Talebazar- Kharepatan 132kV line	35	0.50	17.5
17	Nandurbar- Dondaicha (D-1) 132kV line	30	0.50	15
18	Panchpatta-Nasik 132kV D/c	35	0.50	17.5
19	Dindori- Ozar 132kV D/c	25	0.50	12.5
20	220kV Transformer bays	3	2.35	7.05
21	132kV Transformer bays	3	1.60	4.8
22	400kV Bus reactor bay	1	5.00	5
23	220kV Bus reactor bay	1	2.35	2.35
24	220kV Line bays	34	2.35	79.9
25	132kV Line bays	16	1.60	25.6
26	1x50/1x25 MVAR Bus reactor at 220kV Dondaicha/Dhule (MSETCL) S/s	1	2.00	2
27	1x150 MVAR, 420kV Controlled bus reactor (TCR) at 400kV Alkud (MSETCL) S/s	1	25.00	25
	Cost (Cr)			***433.2***
		IDC & Centages	***18%***	***77.98***
	Sub Total			***511.18***
B	**PMU/PDC**			
	PMU including GPS & mounting Panel	152	0.10	15.2
	PDC including visulaization s/w, workstation, data archiving server, operator console & printers, panels	2	1.00	2
	Cost (Cr)			***17.2***
		IDC & Centages	***18%***	3.096
	Sub Total			***20.30***
C	**Communication System**			
	FO Length-OPGW (km)	1400	0.0225	31.5
	Terminal Equipment (STM-16 SDH) (2Gbps)	90	0.075	6.75
	Cost (Cr)			38.25
		IDC & Centages	**18%**	6.885
	Sub Total			***45.14***
D	**Connectivity Transmission System**			
	132kV lines	1560	0.50	780
	220kV line	900	0.65	585
	132kV Line bays	156	1.60	249.6
	220 kV Line Bays	40	2.35	94
	220/33 kV 100 MVA transformer	32	3.00	96
	132/33 kV 50 MVA transformer	97	2.00	194
	220kV transformer bays	32	2.35	75.2
	132kV transformer bays	97	1.60	155.2
	33kV transformer bays	129	0.50	64.5
	Establishment cost of PCC	35	4.00	140
	Cost (Cr)			***2433.5***
		IDC & Centages	***18%***	***438.03***
	Total			***2871.53***

ANNEXURE-25

Abstract Cost Estimate- Rajasthan Strengthening for RE

S.No.	Transmission System	Line Length (Km)	Unit Cost	Cost (Cr)
A	**Intra State -RVPN Proposed**			**3817.46**
B	**RVPN proposed [considered for conveyance for ISTS transfer]**			
1	400kV D/C Bikaner-Sikar (PGCIL) line (Twin Moose).	420		208.51
2	400kV D/C Barmer-Bhinmal (PGCIL) line (Twin Moose).	280		139.02
3	LILO of one circuit of 400kV D/C Raj West-Jodhpur line at 400kV GSS Jodhpur (New) (Twin Moose).	40		49.68
4	400kV bays along with 1x125 MVAR bus reactor at Barmer			31.77
5	400kV bays along with 2x50 MVAR line reactor at Jodhpur (New)			37.01
6	400kV bays along with 1x125 MVAR bus reactor at Bikaner			49.68
		Total		**515.67**
C	**Strengthening within state for conveyance for ISTS transfer**			
1	220kV Bhinmal – Sirohi D/c line	65	0.65	42.25
2	220kV Bhiwadi – Rewari D/c line	25	0.65	16.25
3	220kV Amarsagar –Phalodi D/c line	150	0.65	97.50
4	400kV Bus Reactor Bays	9	5.00	45.00
5	220kV Bus Reactor Bays	2	2.35	4.70
6	220kV Transformer Bays	15	2.35	35.25
7	220kV line Bays	12	2.35	28.20
8	132kV Transformer Bays	15	1.60	24.00
9	125 MVAR, 420kV Bus reactor each at Jaipur, Merta, Ramgarh, Chittorgarh & Bhilwara New	5	4.00	20.00
10	Installation of 1x150 MVAR, 420kV Controlled Bus reactor (TCR) at Bhadla, Akal, Bikane & Jaisalmer	4	25.00	100.00
11	25 MVAR, 220kV Bus reactor each at Dechu and Pokran	2	2.00	4.00
	S/s Augmentation	**MVA**		
1	220/132kV Jodhpur : 2X160 MVA	320	4.00	8.00
2	220/132kV Hindaun : 1x200 MVA	200	4.00	4.00
3	220/132kV Sirohi : 1X160 MVA	160	4.00	4.00
4	220/132kV Chittorgarh : 2X160 MVA	320	4.00	8.00
5	220/132kV Nimbhrhera : 1X160 MVA	160	4.00	4.00
6	220/132kV Udaipur : 1X200 MVA	200	4.00	4.00
7	220/132kV Jaipur : 2X200 MVA	400	4.00	8.00
8	220/132kV Alwar : 1X160 MVA	160	4.00	4.00
1	220/132kV Bilara : 1X160 MVA	160	4.00	4.00
2	220/132kV Bhilwara : 1X160 MVA	160	4.00	4.00
3	220/132kV Beawar : 1X160 MVA	160	4.00	4.00
4	220/132kV Banswara : 1X160 MVA	160	4.00	4.00
	Sub Cost (Cr)			***477.15***
		IDC	***18%***	***85.89***
	Total(Cr)			***563.04***
	Grand Total (B+C)			***1078.71***
D	**PMU/PDC**			
	PMU including GPS & mounting Panel	46	0.10	4.60
	PDC including workstation, operator console & printers, panels	2	1.00	2.00
	Cost (Cr)			***6.60***
	IDC		***18%***	*1.19*
	Sub Total			***7.79***
E	**Communication System**			
	FO Length-OPGW (km)	1400	0.0225	31.50
	Terminal Equipment (STM-16 SDH) (2Gbps)	28	0.075	2.07
	Cost (Cr)			***33.57***
	IDC		***18%***	*6.04*
	Sub Total			***39.61***
F	**Connectivity Transmission System**			
	132kV lines	840	0.50	420.00
	220kV line	495	0.65	321.75
	132kV Line bays	84	1.60	134.4
	220 kV Line Bays	22	2.35	51.7
	220/33 kV 100 MVA transformer	18	3.00	54
	132/33 kV 50 MVA transformer	53	2.00	106
	220kV transformer bays	18	2.35	42.3
	132kV transformer bays	53	1.60	84.8
	33kV transformer bays	71	0.50	35.5
	Establishment cost of PCC	19	4.00	76
	Cost (Cr)			***1326.45***
	IDC		***18%***	*238.76*
	Total			***1565.21***

ANNEXURE-26

Abstract Cost Estimate- HP Strengthening for RE

S.No.	Transmission System	Line Length (CKm)	Unit Cost	Cost (Cr)
A	Intra State -HPTCL Proposed			376.00
B	HPTCL proposed [considered for conveyance for ISTS transfer]			
1	220/33kV S/s at Fozal : 2x63 MVA	126		80.00
2	LILO of 220kV Prini -Nalagarh line at Fozal	20		
C	Strengthening within state for conveyance for ISTS transfer			
1	132kV Kulhal (Uttrancha) – Giri D/c line	40	0.50	20.00
2	132kV Giri – Abdaluapur D/c line	70	0.50	35.00
3	132kV Kunihar – Solan D/c line	25	0.50	12.50
4	132kV Kunihar – Jutog D/c line	20	0.50	10.00
5	132kV Line bays	16	1.60	25.60
6	220kV Transformer Bays	3	2.35	7.05
7	132kV Transformer Bays	3	1.60	4.80
1	220/132kV Giri : 1X160 MVA	160	4.00	4.00
2	220/132kV Kunihar : 1X160 MVA	160	4.00	4.00
3	220/132kV Hamairpur : 1X160 MVA	160	4.00	4.00
	Sub Cost (Cr)			*126.95*
		IDC	18%	22.85
	Total(Cr)			149.80
	Grand Total (B+C)			*229.80*
D	PMU/PDC			
	PMU including GPS & mounting Panel	32	0.10	3.20
	PDC including workstation, operator console & printers, panels	2	1.00	2.00
	Cost (Cr)			*5.20*
	IDC		*18%*	*0.94*
	Sub Total			*6.14*
E	Communication System			
	FO Length-OPGW (km)	500	0.0225	11.25
	Terminal Equipment (STM-16 SDH) (2Gbps)	19	0.075	1.44
	Cost (Cr)			*12.69*
	IDC		*18%*	*2.28*
	Sub Total			*14.97*
F	Connectivity Transmission System			
	132kV lines	100	0.50	50.00
	33kV line	270	0.10	27.00
	132kV Line bays	10	1.60	16
	33 kV Line Bays	54	0.40	21.6
	132/33 kV 25 MVA transformer	22	2.00	44
	132kV transformer bays	22	0.40	8.8
	33kV transformer bays	22	1.60	35.2
	Establishment cost of PCC	6	4.00	24
	Cost (Cr)			*226.60*
	IDC		*18%*	*40.79*
	Sub Total			*267.39*

ANNEXURE-27

Abstract Cost Estimate- J&K Strengthening for RE

Sl.No.	Transmission System	Line Length (CKm)	Unit Cost	Cost (Cr)
A	**PMU/PDC**			
	PMU including GPS & mounting Panel	40	0.10	4.00
	PDC including workstation, operator console & printers, panels	2	1.00	2.00
	Cost (Cr)			***6.00***
	IDC		***18%***	*1.08*
	Sub Total			***7.08***
B	**Communication System**			
	FO Length-OPGW (km)	500	0.0225	11.25
	Terminal Equipment (STM-16 SDH) (2Gbps)	24	0.075	1.80
	Cost (Cr)			***13.05***
	IDC		***18%***	*2.35*
	Sub Total			***15.40***
C	**Connectivity Transmission System**			
	132kV lines	40	0.50	20.00
	33kV line	130	0.10	13.00
	220kV line	45	0.65	29.25
	220kV Line bays	2	2.35	4.7
	132kV Line bays	4	1.60	6.4
	33 kV Line Bays	26	0.40	10.4
	132/33 kV 50 MVA transformer	3	2.00	6
	220/33 kV 100 MVA transformer	2	3.00	6
	220kV transformer bays	*2*	*2.35*	4.7
	132kV transformer bays	3	1.60	4.8
	33kV transformer bays	5	0.50	2.5
	Establishment cost of PCC	2	4.00	8
	Cost (Cr)			***115.75***
	IDC		***18%***	*20.84*
	Sub Total			***136.59***

Annexure - 28

A) Tamil Nadu

S.No.	Transmission Lines	Line Length (Km)	Unit Cost	Cost (Cr)
1	132kV lines	*120*	*0.50*	*60*
2	230kV line	*90*	*0.65*	58.5
3	132kV Line bays	12	1.60	19.2
4	230 kV Line Bays	4	2.35	9.4
5	230/33 kV 100 MVA transformer	3	3.00	9
6	132/33 kV 50 MVA transformer	8	2.00	16
7	230kV transformer bays	3	2.35	7.05
8	132kV transformer bays	8	1.60	12.8
9	33kV transformer bays	11	0.50	5.5
10	Establishment cost of PCC	3	4.00	12
	Cost (Cr)			*209.45*
	IDC	*18 %*		*37.70*
	Total			***247***

B) Andhra Pradesh

S.No.	Transmission Lines	Line Length (Km)	Unit Cost	Cost (Cr)
A				
1	132kV lines	*121*	*0.50*	*60.5*
2	220kV line	*90*	*0.65*	58.5
3	132kV Line bays	12	1.60	19.2
4	220 kV Line Bays	4	2.35	9.4
5	220/33 kV 100 MVA transformer	3	3.00	9
6	132/33 kV 50 MVA transformer	8	2.00	16
7	220kV transformer bays	3	2.35	7.05
8	132kV transformer bays	8	1.60	12.8
9	33kV transformer bays	11	0.50	5.5
10	Establishment cost of PCC	3	4.00	12
	Cost (Cr)			***209.95***
	IDC	*18 %*		*37.79*
	Total			***248***

C) Karnataka

S.No.	Transmission Lines	Line Length (Km)	Unit Cost	Cost (Cr)
	132kV lines	120	0.50	60.00
	220kV line	90	0.65	58.50
	132kV Line bays	12	1.60	19.2
	220 kV Line Bays	4	2.35	9.4
	220/33 kV 100 MVA transformer	3	3.00	9
	132/33 kV 50 MVA transformer	9	2.00	18
	220kV transformer bays	3	2.35	7.05
	132kV transformer bays	9	1.60	14.4
	33kV transformer bays	12	0.50	6
	Establishment cost of PCC	3	4.00	12
	Cost (Cr)			***213.55***
	IDC		***18%***	*38.44*
	Total			***252***

D) Gujarat

S.No.	Transmission Lines	Line Length (Km)	Unit Cost	Cost (Cr)
	66kV lines	260	0.20	52
	220kV line	90	0.65	58.5
	66kV Line bays	32	0.60	19.2
	220 kV Line Bays	4	2.35	9.4
	220/66 kV 100 MVA transformer	10	3.00	30
	220kV transformer bays	10	2.35	23.5
	66kV transformer bays	10	0.60	6
	Establishment cost of PCC	3	4.00	12
	Cost (Cr)			***210.6***
		IDC & Centages	***18%***	*37.908*
	Total			***249***

E) Maharashtra

S.No.	Transmission Lines	Line Length (Km)	Unit Cost	Cost (Cr)
	132kV lines	142	0.50	71
	220kV line	90	0.65	58.5
	132kV Line bays	14	1.60	22.4
	220 kV Line Bays	4	2.35	9.4
	220/33 kV 100 MVA transformer	3	3.00	9
	132/33 kV 50 MVA transformer	9	2.00	18
	220kV transformer bays	3	2.35	7.05
	132kV transformer bays	9	1.60	14.4
	33kV transformer bays	12	0.50	6
	Establishment cost of PCC	4	4.00	16
	Cost (Cr)			***231.75***
		IDC & Centages	***18%***	***41.72***
	Total			***273***

F) Rajasthan

S.No.	Transmission Lines	Line Length (Km)	Unit Cost	Cost (Cr)
	132kV lines	140	0.50	70.00
	220kV line	90	0.65	58.50
	132kV Line bays	14	1.60	22.4
	220 kV Line Bays	4	2.35	9.4
	220/33 kV 100 MVA transformer	2	3.00	6
	132/33 kV 50 MVA transformer	8	2.00	16
	220kV transformer bays	2	2.35	4.7
	132kV transformer bays	8	1.60	12.8
	33kV transformer bays	10	0.50	5
	Establishment cost of PCC	3	4.00	12
	Cost (Cr)			***216.80***
	IDC		***18%***	*39.02*
	Total			***256***

G) Himachal Pradesh

S.No.	Transmission Lines	Line Length (Km)	Unit Cost	Cost (Cr)
	132kV lines	20	0.50	10.00
	33kV line	58	0.10	5.80
	132kV Line bays	2	1.60	3.2
	33 kV Line Bays	12	0.40	4.8
	132/33 kV 25 MVA transformer	5	2.00	10
	132kV transformer bays	5	0.40	2
	33kV transformer bays	5	1.60	8
	Establishment cost of PCC	1	4.00	4
	Cost (Cr)			***47.80***
	IDC		***18%***	*8.60*
	Total			***56***

GRAND TOTAL [A to G] (Cr)	***1581***

ANNEXURE-29

PROPOSED STATCOM

Sl.No.	Location		Rating	Esitameted Cost (Cr.)
1	Tamil Nadu	220 kV Theni S/s	+100/(-)50 MVAR	57.75
		220 kV Kodikuruchi S/s	+100/(-)50 MVAR	57.75
		220 kV Udayathur S/s	+100/(-)50 MVAR	57.75
2	Gujarat	220 kV Radhanpur S/s	+50/(-)100 MVAR	57.75
3	Maharashtra	220kV Vita/Pandharpur (MSETCL) S/s	+50/(-)100 MVAR	57.75
4	Andhra Pradesh	220kV Uravakonda S/s	+100/(-)100 MVAR	77
5	Karnataka	220kV Chitradurga	+50/(-)100 MVAR	57.75
6	Rajasthan	220kV Tinwari	+50/(-)100 MVAR	57.75
7	J&K	220kV Budgam	+125/(-)25 MVAR	57.75
		220kV Udhampur	+125/(-)25 MVAR	57.75
			Sub Total (Cr.)	**597**
			IDC@18% (Cr.)	**107**
			Total (Cr.)	**704**

PROPOSED SVC

Sl.No.	Location		Rating	Esitameted Cost (Cr.)
1	Tamil Nadu	400kV Udumalpet S/s	+400/(-)300 MVAR	211.75
2	Maharashtra	400kV Kolhapur (PG) S/s	+400/(-)300 MVAR	211.75
			Sub Total (Cr.)	**424**
			IDC@18% (Cr.)	**76**
			Total (Cr.)	**500**

ANNEXURE-30

Intra State Transmission System – Phase wise implementation for Tamilnadu (DPR)

Phase - I Transmission Scheme, detailed below was proposed by TANTRANSCO and already approved by CEA. This is to be completed in two phases : Phase - I in 2012 - 13 and phase - II in 2013 - 14.

For Commissioning by 2012 - 13:

Intra State Scheme Proposed by TANTRANSCO to be completed in 2012 -2013 :

- 2 x 315 MVA, 1 x 200 MVA Kayathar 400/230 -110 kV SS in Tirunelveli area
- Kayathar - Karaikudi 400 kV D/c (Quad)
- Karaikudi - Pugulur 400 kV D/c (Quad)
- Establishment of 230/110 kV, 3 x 100 MVA Substation at Vannikonendal in Tirunelveli area (Sanction Accorded by TANTRANSCO)
- LILO of Kayathar - Anupankulam 230 kV S/c at Kayathar
- LILO of Kayathar - Pasumalai 230 kV S/c at Kayathar
- Kayathar - Vannikonendal 230 kV D/c
- Vannikonendal - Common point 230 kV D/c
- Common point - Paneerkulam 230 kV S/c
- Common point - Villiseri 230 kV S/c
- Kayathar - Ayynaruthu 110 kV D/c
- Vannikonendal (220 kV) - Vannikonendal 110 kV D/c
- Vannikonendal - South VagaiKulam 110 kV S/c
- Vannikonendal - Sundankurichi 110 kV S/c
- Vannikonendal - Uthumalai 110 kV S/c
- Vannikonendal - Ayyanaruthu 110 kV S/c

Estimated Cost : Rs 1089 Cr

For Commissioning by 2013 -14 :

Phase - I Intra State Scheme Proposed by TANTRANSCO to be completed in 2013 - 2014:

- 2 Nos. 400 kV bay provision at 400/230-110 kV Sholinganallur/Ottiampakkam Substation in Chennai area for Pugalur - Ottiampakkam 400 KV D/c (Quad)
- 4 Nos bay provision at Singarapet 400/230kV in Vellore area for LILO of Pugulur - Ottiampakkam 400kV D/c Quad line at Singarapet 400 kV S/s
- 4 Nos bay provision at Karaikudi 400 kV Substation (Kayathar-Karaikudi 400 kV D/c (Quad) line & Karaikudi - Pugulur 400 kV D/c (Quad))
- 4 Nos bay provision at Pugulur 400 kV Substation (Pugulur - Ottiyambakkam & Karaikudi – Pugulur 400 kV D/c (Quad))
- Pugulur - Singarapet - Sunguvarchatram/ Ottiyambakam 400 kV D/c (Quad)

Estimated Cost : Rs 1504 Cr

Intra State Transmission System – Phase wise implementation for Andhra Pradesh (DPR)

For Commissioning by 2014 -15 :
(Tr system submitted through DPR by APTRANSCO)

- Hindupur – Madhugiri 400 kV D/c(Quad)
- Hindupur – Kondapur 400 kV D/c (Quad)
- Uravakonda – Gooty 400 kV D/c (Quad)
- Porumamilla – Kondapuram 220 kV D/c (Single Moose)
- Chakrayapeta – Kondapuram 220 kV D/c (Single Moose)
- Betamcherla – Kondapuram 220 kV D/c (Single Moose)
- Jammalamadugu – Kondapuram 220 kV D/c (Single Moose)
- Thirumalaipalle – Kondapuram 220 kV D/c (Single Moose)
- Establishment of 220/132kV, 2x100 MVA Substation at Porumamilla
- Establishment of 220/132kV, 2x100 MVA Substation at Chakrayapeta
- Establishment of 220/132kV 2x100 MVA Substation at Betamcherla
- Establishment of 220/132kV 2x100 MVA Substation at Jammalamadugu
- Establishment of 220/132kV, 2x100 MVA Substation at Thirumalaipalle
- Establishment of 400/220kV, 4x315 MVA Substation at Kondapuram

Estimated Cost : Rs 1080 Cr

Phasing of Transmission System Strengthening for Gujarat

Gujarat transmission System as per DPR

For commissioning by 2012-13

- Nakhatrana – Varsana 220 kV D/c (ACSR Zebra)
- Establishment of 400/220 KV, 2 x 315 MVA Substation at Halvad
- Establishment of 220/132 KV, 2 x 100 MVA Substation at Bhatia
- Charanka-Sankhari 400KV D/c
- Charanka-Jangral 220KV D/c (Al-59)
- Establishment of 400/220KV, 2x315 MVA Substation at Charanka

Estimated Cost : Rs 910 Cr

For commissioning by 2013-14

- Bhatia – Kalavad – Kangasiyali 220 KV D/c (AAAC Moose)
- Amreli – Jasdan 220 kV D/c (AAAC Moose)
- Bhatia (220 KV) – Bhatia (132 KV) 132 kV D/c (ACSR Panther)
- Varsana – Halvad 400 KV D/c line (Quad. Moose)
- Establishment of 220/66 KV, 1x 100 MVA & 220/132 KV, 1 x 100 MVA Substation at Jasdan

Estimated Cost : Rs 473 Cr

For commissioning by 2014-15

- Morbi – Tankara – Chorania 220 kV D/c (AAAC Moose)
- Establishment of 220/66 KV, 1x 100 MVA Substation at Tankara

Estimated Cost : Rs 117 Cr

Phasing of Intra State Transmission System for Rajasthan

Rajasthan transmission System as per DPR

For commissioning by 2013-14

- 400/220kV, 3x500 MVA and 220/132kV, 3x160 MVA Pooling Substation GSS at Ramgarh (Jaisalmer) alongwith 400kV, 1x125 MVAR, 400kV Shunt Reactor (Bus type) and 2x50 MVAR Shunt Reactor (line type) for 400kV D/C Ramgarh-Bhadia line
- 400/220kV, 3x315 MVA and 220/132kV, 3x160 MVA Pooling Substation GSS at Bhadia (Jodhpur) alongwith 400kV, 1x125 MVAR, 400kV Shunt Reactor (Bus type) and 4x50 MVAR, 400kV Shunt Reactor (line type) for Bhadia ends of 400kV D/C Bhadia-Bikaner line, 400kV LILO Jodhpur-Merta at Bhadia line and 400kV D/C Ramgarh-Bhadia line.
- Augmentation of 400kV GSS Akal by installation of 400/220 kV, 1x500 MVA Transformer along with 400kV, 1x125 MVAR and 400kV, 2x50 MVAR Shunt Reactor (line type) for proposed 400kV Akal-Jodhpur (New) line
- 400kV Interconnecting Lines:
  a. 400kV D/C Ramgarh (Jaisalmer)-Akal (Jaisalmer) line (Twin Moose):
  b. 400kV D/C Ramgarh-Bhadla line (Twin Moose)
  c. 400kV D/C Bhadla-Bikaner line (Quad Moose).
  d. 400kV D/C line from 400/220kV Pooling Station Bhadla to LILO point at 400kV S/C Jodhpur-Merta line (Twin Moose).
  e 400kV D/C Akal-Jodhpur (New) line (Quad Moose).
- 220kV GSS at Bap and associated lines:
  a 220/132kV, 2x160 MVA & 132/33kV, 2x40/50 MVA GSS at Bap (Distt. Jodhpur)
  b. LILO of 220kV Barsingsar LTPS-Phalodi line at Bap
  c 220kV D/C Bap-Bhadla line
- 220kV GSS at Kanasar and associated lines:
  a. 220/132kV, 2x160 MVA & 132/33kV, 2x40/50 MVA GSS at Kanasar (Distt Jodhpur)

b. 220kV D/C Kanasar-Bhadla line

c. LILO of 132kV PS1-PS2 Line at proposed 220kV GSS at Kanasar

d LILO of 132kV PS2-PS3 Line at proposed 220kV GSS at Kanasar

- Up-gradation of PS No.2 to 132kV Grid Substation with 132/33kV, 2x20/25 MVA Transformers with associated 132kV line.
- Up-gradation of PS No.3 to 132kV Grid Substation with 132/33kV, 2x20/25 MVA Transformers.
- Charging of 132kV line from PS_No.5 to PS_No 1 on 132kV Voltage level via 132kV PS_No.2 GSS and 132kV PS_No.3 GSS & PS_No.4 GSS
- Up-gradation of PS No.4 to 132kV Grid Substation with 132/33kV, 2x20/25 MVA Transformers.
- 400 kV GSS Jaisalmer-2 (location to be decided at a distance 30-50 kms from 400 kV Akai GSS) along with following transmission system

a. 2x500 MVA, 400/220 kV GSS at Jaisalmer

a. 400 kV D/c Jaisalmer-2 -Barmer line

b. 400 kV S/c Akal(1)- Jaisalmer-2 line

c. 1x125 MVAR, 400 kV bus type reactor at proposed 400 kV GSS Jaisalmer-2

d 9 Nos of 220 kV feeder bays at proposed 00 kV GSS Jaisalmer-2

- 220 KV GSS at Badisid (near Bap) (Jodhpur Distt.)

a. 220/132 KV, 1x160 MVA GSS at Badisid

b. 220 KV D/c Badisid-Bap (U/C 220 KV GSS) line

c 220 KV D/c Badisid-Aau (Propose 220 KV GSS) line

d. 132/33, 1x20/25 MVA transformers at proposed 220 KV GSS Badisid

e. Additional 2 Nos. of 220 KV feeder bay . 6 Nos. of 132 KV feeder bays and 6 Nos of 33 KV feeder bays for Wind /Solar developers

f. 2 nos. of 1 x20/25 MVA,132/33 KV GSS along with 25 kM 132 kV 2xD/C lines (to be identified later) with additional 2 Nos. of 132 KV feeder bays and 4 Nos. 33 KV feeder bays at each new 132 KV GSS for Wind/ Solar developers

- 220 KV GSS at Aau (New loc.) (Jodhpur Distt.)

a 2201132 KV. fx160 MVA GSS at Aau

b 220 KV D/C Aau-Baitwasia (U/C 2 0 KV GSS) line

c. 132/33. 1x20/25 MVA transformers at pro osed 220 KV GSS Aau

d. LILO of existing 132 kV S/c Aau (132 KV GSSj-Phalodi line at proposed 220 KV GSS Aau

e Additional 2 Nos. of 220 KV feeder bays, 6 Nos. of 132 KV feeder bays and 6 Nos. of 33 KV feeder bays for Wind/ Solar developers

f. 2 nos. of 1 x20/25 MVA,132/33 KV GSS along with 25 kM 132 kV 2xD/C lines (to be identified later) with additional 2 Nos. of 132 KV feeder bays and 4 Nos. of 33 KV feeder bays at each new 132 KV GSS for Wind / Solar developer

- 220 KV GSS at PS_1 (New location other th n PHED s/s) /Bajju (New location) (Bikaner Distt.)

  a 220/132 KV. 1x160 MVA GSS at PS_1/Bajju

  b 220 KV D/C PS_11 Bajju –Bhadla (U/C 400 KV GSS) line

  c 132/33. 1x20/25 MVA transformers at pr posed 220 KV GSS PS_1/Bajju

  d Additional 2 Nos. of 220 KV feeder bay J 6 Nos of 132 KV feeder bays and 6 Nos of 33 KV feeder bays for Wind I Solar developers

  e. LILO of existing 132 KV S/C PS1. -Bajju line at proposed 220 KV GSS PS_1/ Bajju

  f. 2 nos of 1 x20/25 MVA.132/33 KV GSS along with 25 kM 132 kV 2xD/C lines (to be identified later) with additional 2 Nos. of 132 KV feeder bays and 4 Nos of 33 KV feeder bays at each new 132 KV GSS for Wind/Solar developers

- 220 KV GSS at Ramdev Nagar (Near Phalodi) (Jodhpur Distt.)

  a 220/132kV, 1x160 MVA GSS at Ramdev Nagar

  b. LILO of one circuit of U/C 220 K D/C Dechu-Phalodi line at .proposed 220 KV GSS Ramdev Nagar

  c 132/33, 1x20/25 MVA transformers at proposed 220 KV GSS Ramdev Nagar Additional 2 Nos. of 220 KV feeder bay 6 Nos. of 132 KV feeder bays and 6 Nos. of 33 KV feeder bays for Wind /Solar developers

  d 2 nos. of 1 x20/25 MVA,132/33 KV GS along with 25 km 132 kV 2xD/C lines (to be identified later) with additional 2 Nos of 132 KV feeder bays and 4 Nos. of 33 KV feeder bays at each new 132 KV GSS for Wind/Solar developers

- 220 KV GSS Chatrail (Jaisalmer Distt.)

a. 220/132 KV, 1 x160 MVA GSS at Chatrail

a. 220 KV D/C Chatrail-Ramgarh (U C 400 KV GSS) line

b. 132/33 KV. 1 x20/25 MVA GSS at Chatrail

c Additional 2 Nos. of 220 KV feeder bay , 6 Nos. of 132 KV feeder bays and 6 Nos. of 33 KV feeder bays for Wind/Solar developers

d. 2 nos. of 1x20/25 MVA,132/33KV GS along with 25 km 132 kV 2xD/C lines (to be identified later) with additional 2 Nos. of 132 KV feeder bays and 4 Nos of 33 KV feeder bays at each new 132 KV GSS for Wind/ Solar developers

- 220 KV GSS at Pokaran (New loc.) (Jaisalmer Distt.)

a 220/132 KV. 1x160 MVA GSS at Pokara

b LILO of both the ckts of U/C 220 V D/C Ramgarh GTPP - Dechu line at Pokaran

c. 132/33. 1x20/25 MVA transformers at proposed 220 KV GSS Pokaran

d L1LO of existing 132 KV S/c Chandan-Pokaran line al proposed 220 KV GSS Pokaran

e. Additional 2 Nos. of 220 KV feeder bay, 6 Nos of 132 KV feeder bays and 6 Nos. of 33 KV feeder bays for Wind/Solar developers

f. 2 nos of 1x20/25 MVA,132/33 KV GS along with 25 kM 132 kV 2xD/C lines (to be identified later) with additional 2 Nos. of 132 KV feeder bays and 4 Nos. of 33 KV feeder bays at each new 132 KV GSS for Wind / Solar developers

- 220 KV GSS at Kolayat (New loc.) (Bikaner Distt.)

a. 220/132 KV, 1x160 MVA GSS at Kolayat

b. 15 Km 220 KV D/C Gajner (U/C 220 KV GS)-Kolayat line

c. 132/33, 1 x20/25 MVA transformers at proposed 220 KV GSS Kolayat

d LILO of existing 132 KVS/C Kolayat-Baju line at proposed 220 KV GSS Kolayat

e Additional 2 Nos. of 220 KV feeder bays, 6 -los of 132 KV feeder bays and 6 Nos of 33 KV feeder bays for Wind / Solar developers

f 2 nos of 1x20/25 MVA,132/33 KV GSS along with 25 kM 132 kV 2xD/C lines (to be identified later) with additional 2 Nos of 132 KV feeder bays and 4 Nos. of 33 KV feeder b ys at each new 132 KV GSS for Wind I Solar developers

Estimated Cost : Rs 3817 Cr.

Phasing of Transmission System Strengthening for Himachal Pradesh

Intra State strengthening as per DPR

For commissioning by 2013-14

- 220/132/66kV, 1x80/100MVA Sub station at Sunda
- 66kV Andhra PH to Sunda HEP D/c line
- 33/132kV, 2x31.5MVA S/s at Chambi
- LILO of 132kV Dehra-Kangra S/c at Chambi HEP
- 22/66kV GIS S/s at Nirmand (Bagipul)
- 66kV Bagipul– Kotla D/c line
- Augmentation of 22/66kV & 66/220kV transformer at Kotla

Estimated Cost: Rs 252 Cr.

For commissioning by 2014-15

- 132/220kV. 2x80/100MVA GIS S/s at Chhaur
- 132kV Chhaur – Sarsadi D/c line

Estimated Cost: Rs 90 Cr.

For commissioning by 2015-16

- 132kV Tangnu Romai HEP – Sunda HEP D/c line
- 132kV Rupin HEP – Sunda HEP D/c line

Estimated Cost: Rs 34 Cr

ANNEXURE-31

Phasing of Strengthening requirements within State (Tamilnadu) for conveyance to ISTS- Proposed by POWERGRID

For commissioning by 2013 - 14

- Establishment of 400/230 kV, 3 x 315 MVA Kanarpatty Substation in Tirunelveli area including 2 Nos 400 kV bay extension at Tirunelveli (PGCIL) 400 kV Substation
- Kanarpatti - Tirunelveli (PGCIL) 400 kV D/c (Quad)
- Kanarpatti - Kayathar 400 kV D/c
- Kayathar - TT Auto 230 kV D/c
- Veeranam - Thirunelveli 230 kV D/c
- Veeranam - Kodikuruchi 230 kV D/c

Estimated Cost : Rs 252 Cr

For commissioning by 2014 - 15

- Samugarengapuram – Kanarpatty 230kV D/c
- Samugarengapuram – Khayathar 230kV D/c
- Maranthai - Kanarpatti 230 kV D/c
- Vallyoor - Khayathar 230 kV D/c (Al-59)
- Kumarpuram - Kanarpatty 230 kV D/c
- Cuddalore – Nyve i 230 kV D/c
- Villupuram – Nyveli 230 kV D/c
- Villupuram – Spkoil 230 kV D/c
- Establishment of 3 x 100 MVA, 230 kV Substation at Maranthai
- Establishment of 3 x 100 MVA, 230 kV Substation at Valliyoor
- Establishment of 3 x 150 MVA 230 kV Substation at Samugarengapuram
- Establishment of 2 x 100 MVA 230 kV Substation at Kumarapuram

Estimated Cost : Rs 646 Cr

For commissioning by 2015 - 16

- Kayathar - Tennempatty 400kV D/c (Quad)
- Thappagundu – Anikadavu 400kV D/c
- LILO of one ckt of Thappagundu – Anikadavu 400kV line at Udumalpet
- Udumalpet - Vagarai 400kV D/c
- Rasipalayam - Vagarai 400kV D/c
- Salem - Singarpet 400kV D/c
- Salem - Rasipalayam 400kV D/c
- OK Manadapam - Thudiyalur 230kV D/c
- Ingur - Thiruppur 230kV D/c
- Arasur - M.C. Patty 230kV D/c
- Arasur - Thiruppur 230kV D/c
- Sembatti - Madurai 230kV D/c
- Installation of 2 x 100 MVA, 230/110 kV transformer at Sembatti, Anupankulam, Cuddalore & Villupuram
- Installation of 2 x 150MVA, 230/110 kV transformer at Pudukottai & Thiruvannamalai
- Establishment of 400/230 kV, 4 x 315 MVA Substation at Tennempatty
- Establishment of 400/110 kV, 4 x 200 MVA Substation at Thappagundu
- Establishment of 400/230 kV, 2 x 315 MVA & 400/110 kV, 2 x 200 MVA Substation at Anikadavu
- Establishment of 400/230 kV, 2 x 315 MVA & 400/110 kV, 3 x 200 MVA Substation at Rasipalayam
- Establishment of 400/230 kV, 4 x 315 MVA & 400/110 kV, 2 x 200 MVA Substation at Vagarai S/s
- 1 x 150 MVAR, 420 kV Controlled Bus Reactor (TCR) each at Rasipalayam & Thappagundu Substations

Estimated Cost : Rs 1598 Cr

Phasing of Strengthening requirements within State (Andhra Pradesh) for conveyance to ISTS

For Commissioning by 2014 -15 :

- Hindupur – Uravakonda 400 kV D/c
- Pampanur Tanda - Hindupur 220 kV D/c (Twin Moose)
- Penukonda – Hindupur 220 kV D/c (Single Moose)
- Vajrakarur SS –Uravakonda 220 kV D/c (Twin Moose)
- Borampalli SS –Uravakonda 220 kV D/c (Twin Moose)
- Establishment of 220/132kV, 2x100 MVA Substation at Pampanur
- Establishment of 220/132kV, 2x100 MVA Substation at Penukonda
- Establishment of 220/132kV, 1x100 MVA Substation at Vajrakarur
- Establishment of 220/132kV, 1x100 MVA Substation at Borrampalli
- Establishment of 400/220kV, 3x315 MVA Substation at Hindupur
- Establishment of 400/220kV, 4x315 MVA Substation at Uravakonda
- 220 kV Wanaparthy – Brahmakotkur D/c
- 220 kV Mehaboobnagar – Bhotnagar D/C (AL-59)
- 220 kV Mehaboobnagar – Juralaprkr D/c
- 220 kV Bhotnagar - Kalwakurthy D/c
- Installation of 400/220kV, 2 x 315 MVA transformer at Uravakonda & Kurnool (APTransco) S/S and 3 x 315 MVA transformers at Mehaboobnagar SS
- Augmentation of 220/110 kV 1 x 100 MVA transformer at Porumamilla, Belamcherla, Jammalamadugu, Thirumalapalle S/S, 3 x 100 MVA transformers at Vajrakarur S/S, 2 x 150 MVA transformer at Pampanur and 3 x 150 MVA at Borrampalli
- 1x150 MVAR, 420kV Controlled Bus Reactor (TCR) each at Kondapur & Hindupur S/s

Estimated Cost : Rs 1141 Cr

For Commissioning by 2015 -16

- 220 kV Mailaram – Shankarapalli D/c
- 220 kV Kurnool – Brahmakotkur D/c
- 220 kV Kurnool – AP Carbide D/c
- 220 kV Kalyandurg – Ananthpur D/c
- 220 kV Shankarapalli – Shapurnagar D/c
- 220 kV Ramagundam-S – Ramagundam-pvt D/c
- 220 kV Kadapa – Rajampet D/c

Estimated Cost : Rs 266 Cr

For Commissioning by 2016 – 17

- Installation of 400/220kV, 2 x 315 MVA transformer at Mailaram & Hyderabad AP S/s

Estimated Cost : Rs 79 Cr

Phasing of Transmission System Strengthening for Karnataka

Strengthening requirements within State (Karnataka) for conveyance to ISTS-Proposed by POWERGRID

For commissioning by 2013-14

- Hiryur– Chitrdurga 220kV S/c to D/c Conversion (AAAC moose)
- Chitrdurga– Davangiri 220kV S/c to D/c Conversion (AAAC moose)

Estimated Cost: Rs 49 Cr.

For commissioning by 2014-15

- Chintamani – Malur 220kV D/c
- Kushtagi-Lingasugur 220kV D/c
- Shimogha- Kudermukh 220kV D/c

Estimated Cost: Rs 175 Cr.

For commissioning by 2015-16

- Raichur – Jurilaproya 220kV D/c
- 1x150 MVAR, 420kV Controlled Bus reactor (TCR) one each at Hiriyur & Davangiri

Estimated Cost: Rs 105 Cr.

For commissioning by 2016-17

- Madhugiri - Gowribidanur 220kV D/c
- Mysore – Hootgalli 220kV D/c
- Somanhalli – HSR Layout 220kV D/c
- Somanhalli – Yerandahalli 220kV D/c

Estimated Cost: Rs 137 Cr.

Phasing of strengthening requirements within State (Gujarat) for conveyance to ISTS- Proposed by POWERGRID

For commissioning by 2013-14

- LILO of 220kV Bala –Dhanki at Adalsar
- Nankhakhar- Adani (Mundra) 220kV 2nd D/c (or reconductoring of existing line to AL59/High capacity in case of space constraints)
- Installation of 3rd 400/220kV, 1x315 MVA transformer at APL-Mundra
- Installation of 1x50/1x25 MVAR Bus reactors each at 220kV Motipaneli, Bhatia, Nakhatarna, Bachau, Deodhar - GETCO S/s

Estimated Cost : Rs 86 Cr

For commissioning by 2014-15

- Vadavi – Chatral 220kV D/c
- Varsana – Bhachau – Radhanpur 220 kV D/c (AAAC Moose)
- Radhanpur- Sankhari 220kV D/c (AL-59)
- Amreli- Vartej 220kV D/c
- Dharangdhara – Bala 220kV D/c
- Sarla- Chorania 220kV (AL-59) D/c
- Chorania- Salejada 220kV D/c
- Solar Park Ph-II – Sankhari 400kV D/c
- LILO of 400KV D/C Mundra(APL) – Zerda line at Solar Park Ph-II
- LILO of both circuits of 220KV D/C Deodhar – Tharad line at Solar Park Ph-II
- Establishment of 400/220KV, 2x315 MVA Substation at Solar Park Ph-II (5x100 MVA, 66/220kV)
- 1x150 MVAR, 420kV Controlled Bus Reactor (TCR) at Solar Park-II

Estimated Cost : Rs 696 Cr

Phasing of strengthening requirements within State (Maharashtra) for conveyance to ISTS- Proposed by POWERGRID

For commissioning by 2013-14

- Valve – Dhule (D-III) 220kV D/c
- Dondiacha- Dhule/Dhule(New) 220kV D/c (2nd/1st)
- Jath – Ghatnandare 220kV D/c
- Ahmadnagar- Bhenda 220kV D/c
- Satara – Lonand 220kV D/c (High Cap)
- LILO of 220kV Chinchwad- Theur line at Parvati
- LILO of 220kV Kharepatan –Pawas line at Oni
- LILO of 220kV Karad- K-III & K-1&2 at Malharpeth
- *LILO of 220kV Jath –Mhaisal at Alkud may be avoided (proposal of MSETCL) in order to restrict loading on 220kV system. In case needed, wind farm in Jath complex may directly be integrated with Alkud 220kV on radial feed*
- Shirala-Peth 132kV D/c (2nd) - upgradation of Shirala S/s to 220kV level
- Talebazar- Kharepatan 132kV
- Nandurbar- Dondaicha (D-1) 132kV
- Pachpatta-Nasik 132kV D/c
- Dindori- Ozar 132kV D/c
- Augmentation of 220/132kV transformation capacity by 1x160 MVA (2nd) at Bhenda
- Augmentation of 220/132kV transformation capacity by 1x160 MVA (2nd) at Peth
- Installation of 1x50/1x25 MVAR Bus reactors at 220kV Dondaicha/Dhule (MSETCL) S/s

Estimated Cost : Rs 387 Cr

For commissioning by 2014-15

- Bhalwani -- Malinagar 220kV line
- Chinchwad-Chakan 220kV D/c (2nd)
- Chinchwad- Urse 220kV line (2nd)

- Augmentation of 220/132kV transformation capacity by 1x160 MVA (4th) at Sholapur
- Installation of 1x150 MVAR, 420kV Controlled Bus reactors (TCR) at 400kV Alkud (MSETCL) S/s

Estimated Cost : Rs 124 Cr

Strengthening requirements within State (Rajasthan) for conveyance to ISTS-Proposed by POWERGRID

For commissioning by 2013-14

- Amarsagar –Phalodi 220kV D/c line
- Augmentation of 400kV GSS Jodhpur (New)
  - a 2x50 MVAR, 400kV Shunt Reactor (line type) at 400kV GSS Jodhpur (New) for 400kV D/C Akal-Jodhpur (New) line.
  - b. 400kV bay at Jodhpur (New) for LILO of one ckt of 400kV D/C Raj West LTPS-Jodhpur line.
- Augmentation at 400kV GSS Barmer.
  - a. 1x125 MVAR, 400kV Shunt Reactor (Bus type) at 400kV GSS Barmer.
  - b 400kV bays for 400kV D/C Barmer-Bhinmal (PG) line.
- Augmentation at 400kV GSS Bikaner
  - a. 400kV bays for 400kV D/C Bhadla-Bikaner line and 400kV D/C Bikaner-Sikar (PGCIL) line at Bikaner ends of line
  - b. 1x125 MVAR, 400kV Bus reactor at 400kV GSS Bikaner
- 400kV D/C Bikaner-Sikar (PGCIL) line (Twin Moose).
- 400kV D/C Barmer-Bhinmal (PGCIL) line (Twin Moose).
- LILO of one circuit of 400kV D/C Raj West-Jodhpur line at 400kV GSS Jodhpur (New) (Twin Moose).
- Installation of 220/132kV, 2x160MVA transformer at Jodhpur & Chittorgarh
- Installation of 220/132kV, 1x160MVA transformer at Nimbhrhera & Banswara
- Installation of 220/132kV, 1x200MVA transformer at Udaipur
- Installation of 220/132kV, 2x200MVA transformer at Jaipur
- Installation of 1x25/50 MVAR, 220kV Bus reactor each at Dechu and Pokran

Estimated Cost: Rs 737 Cr.

For commissioning by 2014-15

- Bhiwadi – Rewari 220kV D/c
- Bhinmal – Sirohi 220kV D/c line
- Installation of 220/132kV, 1x160MVA transformer at Sirohi, Alwar, Bilara Bhilwara & Beawar
- Installation of 220/132kV, 1x200MVA transformer at Hindaun
- Installation of 1x150 MVAR, 420kV Controlled Bus reactor (1CR) at Bhadla, Akal, Bikaner & Jaisalmer
- Installation of 1x125 MVAR 420kV Bus reactor at Jaipur, Merta, Ramgarh(2nd), Chittorgarh & Bhilwara New.

Estimated Cost: Rs 342 Cr.

Phasing of Strengthening requirements within State (Himachal Pradesh) for conveyance to ISTS- Proposed by POWERGRID

For commissioning by 2013-14

- 33/220kV, 50/63MVA S/s at Fozal
- LILO of 220kV Prini-Nalagarh S/c at Fozal HEP

Estimated Cost: Rs 80 Cr.

For commissioning by 2014-15

- Kulhal (Uttranchal) – Giri 132kV D/c line
- Giri – Abdaluapur 132kV D/c line
- Kunihar – Solan 132kV D/c line
- Kunihar – Jutog 132kV D/c line
- Installation of 2nd 220/132kV, 1X160 MVA transformer each at Giri, Kunihar & Hamirpur S/s

Estimated Cost: Rs 150 Cr.

Blank

EXHIBIT

BLANK

EXHIBIT-A

Solar Map of India

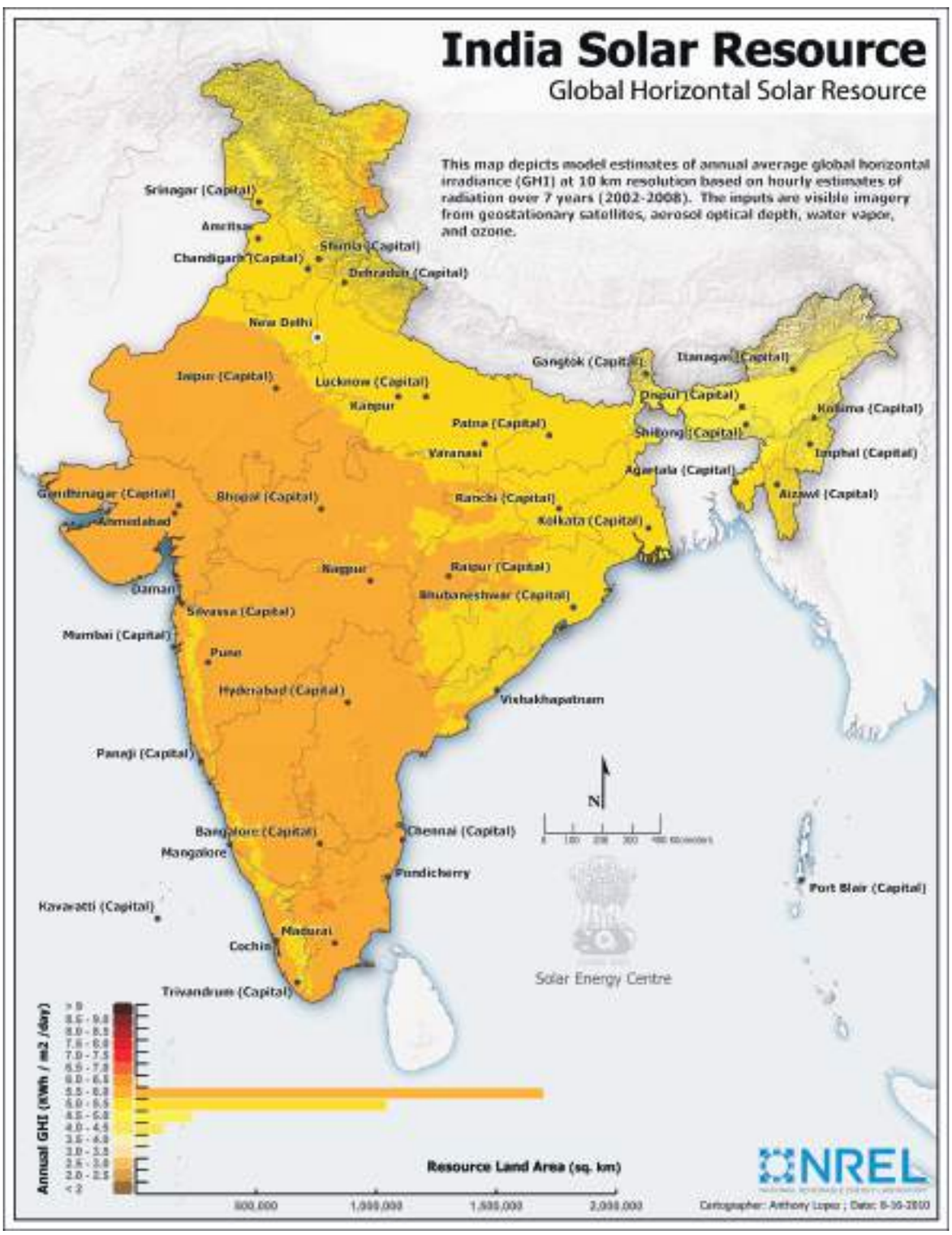

Solar Map of India

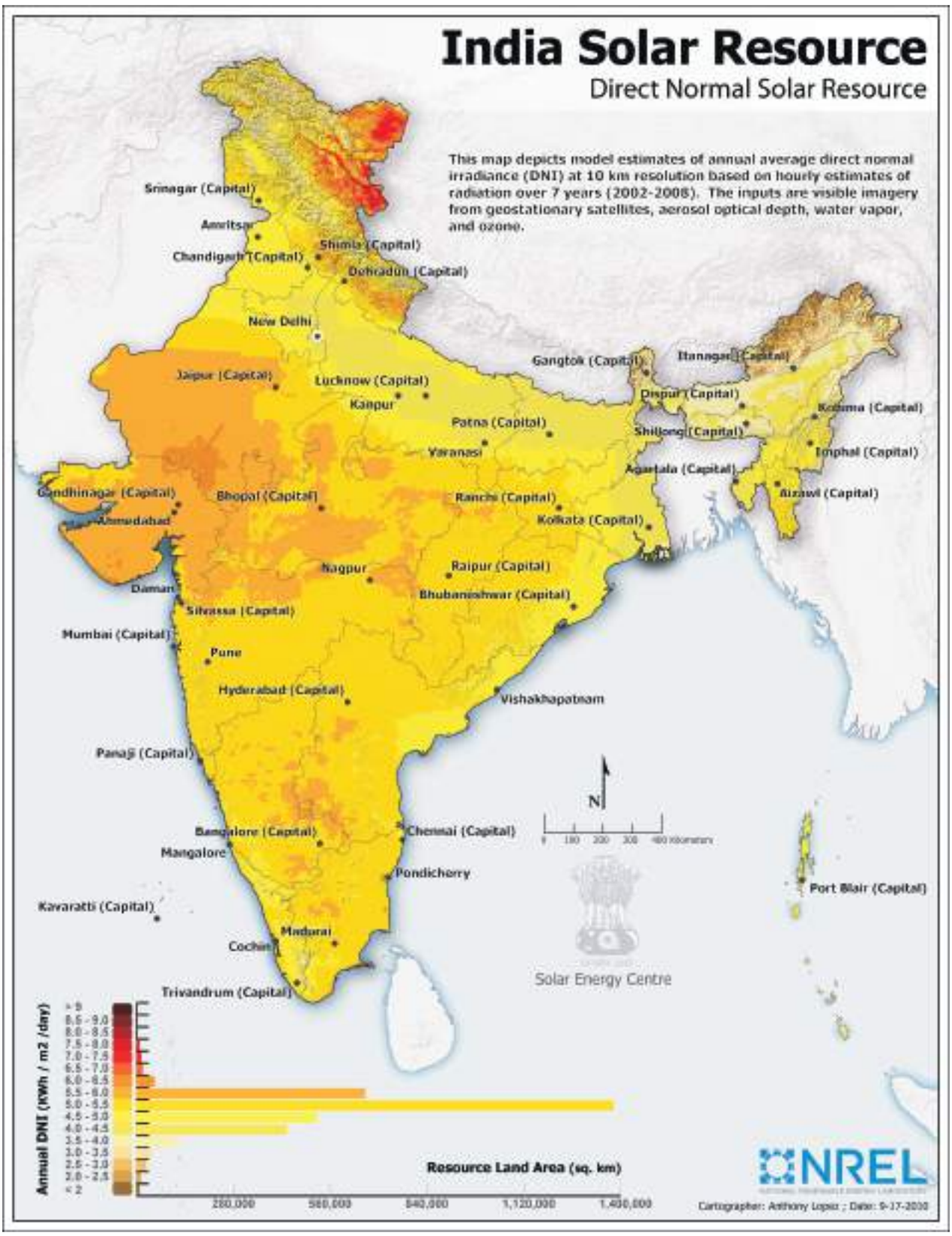

Wind Power Density Map at 50 m level (C-WET)

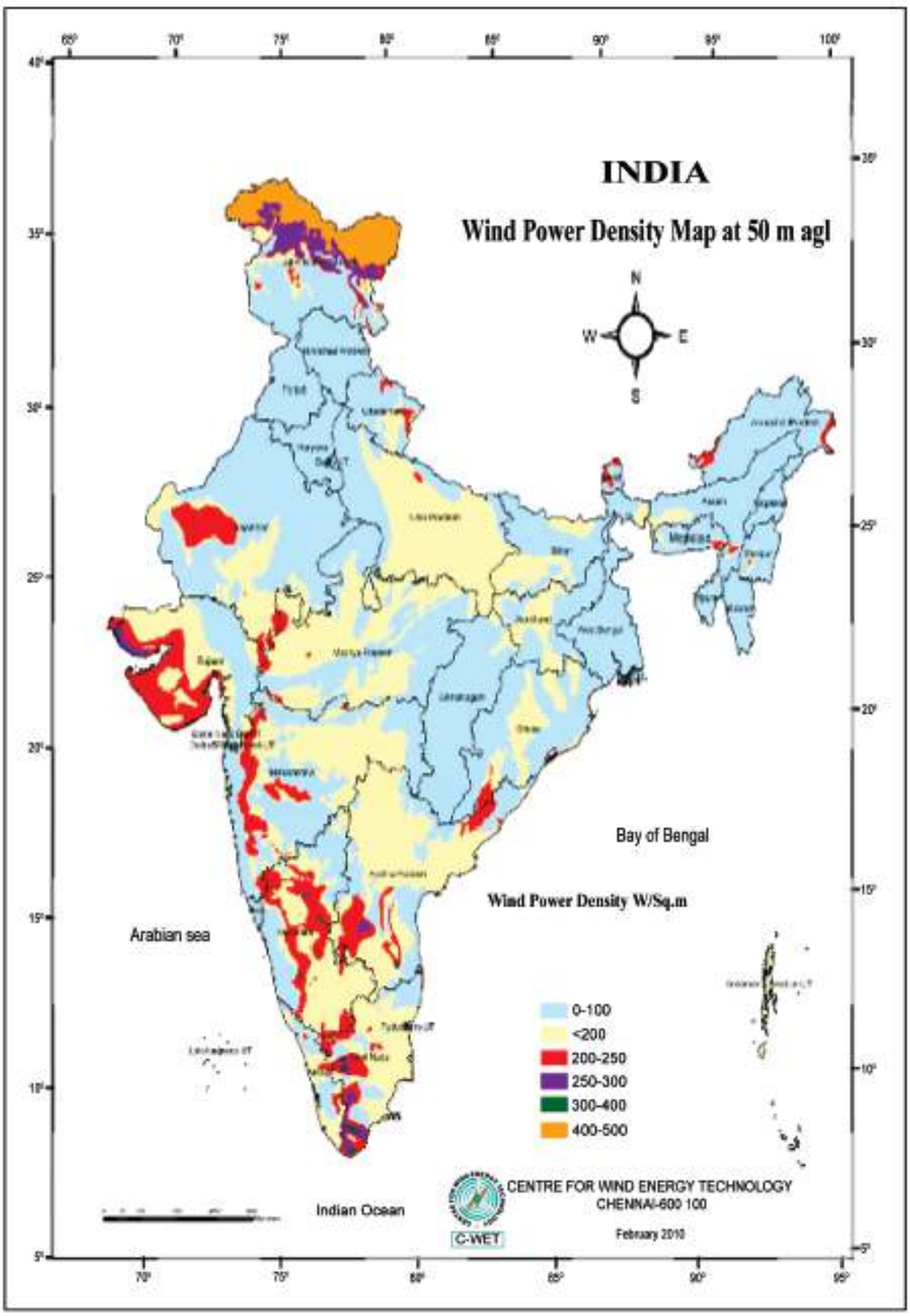

Wind Power Density Map at 80 m level (C-WET)

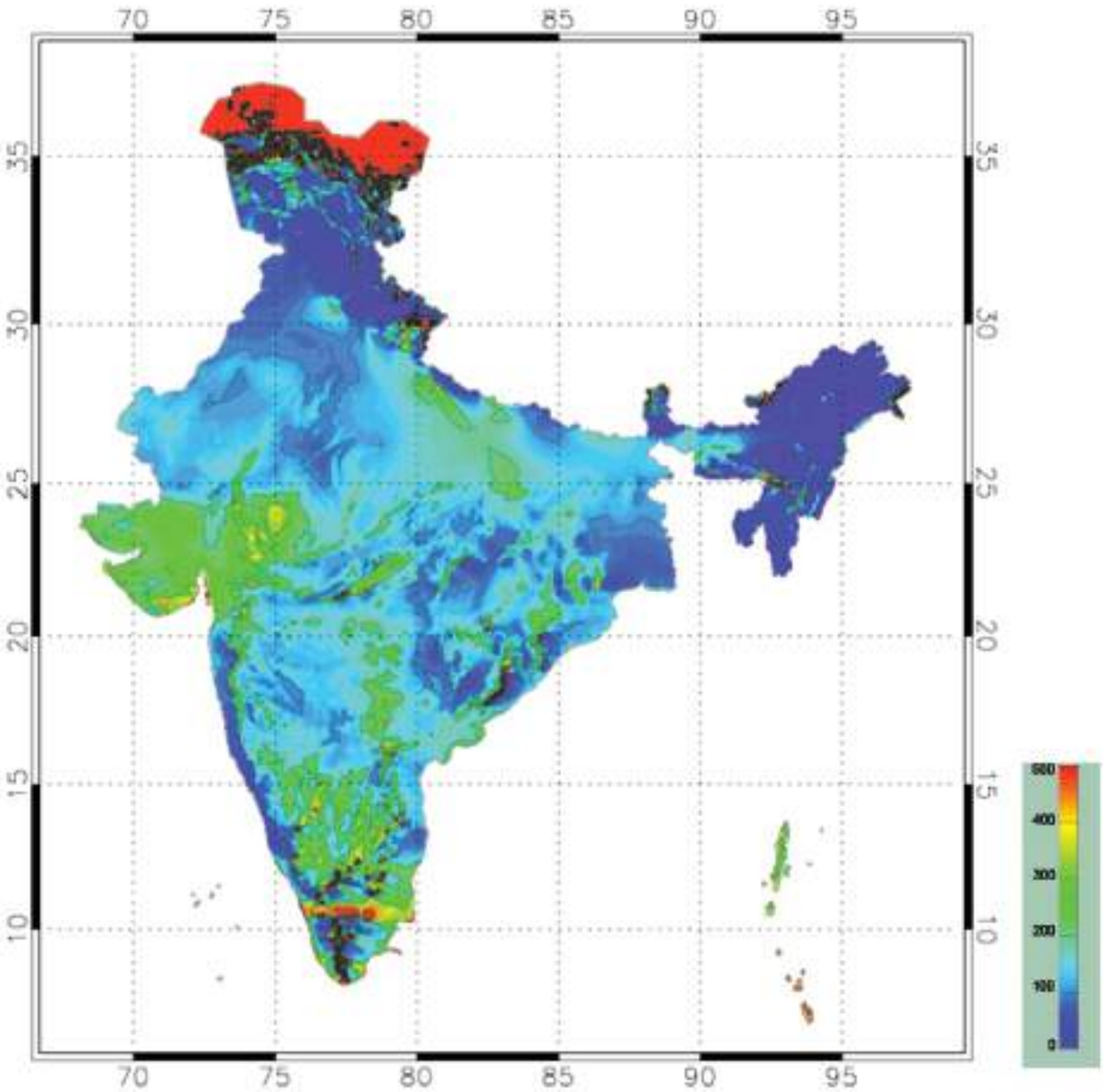

Future RE additions in Tamil Nadu
Wind- 6000 MW
Solar- 3000 MW
ANDHRA PRADESH
TIRUVALLUR
Tiruvallur
CHENNAI
173 MW
Vellore
VELLORE
Kanchipuram
KANCHIPURAM
KRISHNAGIRI
Krishnagiri
125 MW
TIRUVANNAMALAI
173 MW
Tiruvannamalai
DHARMAPURI
175 MW
Dharmapuri
125 MW
Villupuram
VILUPPURAM
PUDUCHERRY
175 MW
125 MW
Salem
SALEM
Cuddalore
CUDDALORE
173 MW
BAY OF BENGAL
NILGIRIS
ERODE
125 MW
PERAMBALUR
Udagamandalam (Ooty)
Erode
Namakkal
Rasipalayam
900 MW
175 MW
TIRUPPUR
106 MW
AKIYALUR
Ariyalur
106 MW
NAGAPPATTINAM
KARAIKAL (PUDUCHERRY)
Nagapattinam
Coimbatore
Karur
TIRUCHCHIRAPPALLI
125 MW
THANJAVUR
Tiruppur
Tiruchchirappalli
175 MW
Thanjavur
Thiruvarur
TIRUVARUR
Anaikadavu
650 MW
COIMBATORE
DINDIGUL
Vagarai
1100 MW
106 MW
PUDUKKOTTAI
173 MW
Pudukkottai
NAGAPATTINAM
LEGEND
State Boundary
District Boundary
State Capital
District Headquarter
Thappagundu
580 MW
KERALA
Theni
THENI
Madurai
173 MW
MADURAI
Sivaganga
106 MW
SIVAGANGA
Palk Strait
125 MW
Virudhunagar
VIRUDHUNAGAR
106 MW
Ramanathapuram
RAMANATHAPURAM
106 MW
Kayathar
700 MW
Tennempatty
1050 MW
THOOTHUKUDI
125 MW
Thoothukudi
Gulf of Mannar
Tirunelveli
Kanarpatty
750 MW
TIRUNELVELI
250
125 MW
KANYAKUMARI
Nagercoil
SRI LANKA
Source-www.mapsofindia.com

EXHIBIT-B1(a)

RE Project in TN
Wind- 12000 MW
Solar- 3000 MW
ANDHRA PRADESH
TIRUVALLUR
Tiruvallur
CHENNAI
Kanchipuram
KANCHIPURAM
173 MW
Vellore
VELLORE
KRISHNAGIRI
Krishnagiri
TIRUVANNAMALAI
173 MW
Tiruvannamalai
DHARMAPURI
175 MW
Dharmapuri
125 MW
VILUPPURAM
PUDUCHERRY
175 MW
Salem
SALEM
Cuddalore
CUDDALORE
173 MW
BAY OF BENGAL
NILGIRIS
ERODE
Udagamandalam (Ooty)
Erode
NAMAKKAL
Namakkal
PERAMBALUR
106 MW
AKIYALUR
106 MW
NAGAPPATTINAM
KARAIKAL (PUDUCHERRY)
Nagapattinam
Rasipalayam
900 MW
175 MW
TIRUPPUR
Coimbatore
Udumalpet
2400 MW
TIRUCHIRAPPALLI
125 MW
THANJAVUR
Thanjavur
Thiruvarur
TIRUVARUR
Anaikadavu
800 MW
COIMBATORE
175 MW
DINDIGUL
Dindigul
Vagarai 1100 MW
106 MW
PUDUKKOTTAI
Pudukkottai
173 MW
LEGEND
State Boundary
District Boundary
State Capital
District Headquarter
Thappagundu
1040 MW
KERALA
Theni
THENI
Madurai
MADURAI
173 MW
Sivaganga
SIVAGANGA
106 MW
Palk Strait
Virudhunagar
VIRUDHUNAGAR
106 MW
Ramanathapuram
RAMANATHAPURAM
106 MW
Kayathar
2600 MW
Tennempatty
1050 MW
THOOTHUKUDI
Thoothukudi
125 MW
Gulf of Mannar
Tirunelveli
TIRUNELVELI
Kanarpatty
650 MW
1380
125 MW
KANYAKUMARI
Nagercoil
SRI LANKA
Source-www.mapsofindia.com
Map not to Scale

EXHIBIT-B1(b)

Future RE additions in Andhra Pradesh
Wind – 5050 MW
Solar - 285 MW
N
ANDHRA PRADESH
DISTRICT MAP
Adilabad
ADILABAD
MAHARASHTRA
CHHATTISGARH
ORISSA
Nizamabad
NIZAMABAD
65 MW
Karimnagar
KARIMNAGAR
Medak
MEDAK
WARANGAL
KHAMMAM
Khammam
VIZIANAGARAM
SRIKAKULAM
Vizianagaram
Srikakulam
VISHAKHAPATNAM
Vishakhapatnam
EAST GODAVARI
Kakinada
Yanam
(PUDUCHERRY)
RANGAREDDY
Rangareddy
HYDERABAD
Hyderabad
Nalgonda
NALGONDA
WEST GODAVARI
Eluru
KRISHNA
Krishna
Mahbubnagar
100 MW
MAHBUBNAGAR
Guntur
GUNTUR
Kurnool
400 MW
KURNOOL
Prakasam
PRAKASAM
Uravakonda
2600
Anantapur
ANANTAPUR
Kondapuram 1345 MW
Cuddapah
115 MW
CUDDAPAH
Nellore
NELLORE
Hindupur 680 MW
CHITTOOR
Chittoor
TAMILNADU
LEGEND
State Boundary
District Boundary
State Capital
District HQ
Map not to Scale
Source-www.mapsofindia.com

EXHIBIT-B2(a)

RE Proj in AP
Wind – 5400 MW
Solar-380 MW
N
ANDHRA PRADESH
DISTRICT MAP
MAHARASHTRA
CHHATTISGARH
ORISSA
Adilabad
ADILABAD
Nizamabad
NIZAMABAD
Karimnagar
KARIMNAGAR
75 MW
Medak
MEDAK
WARANGAL
KHAMMAM
Khammam
VISHAKHAPATNAM
Vishakhapatnam
VIZIANAGARAM
Vizianagaram
SRIKAKULAM
Srikakulam
EAST GODAVARI
Kakinada
Yanam
(PUDUCHERRY)
WEST GODAVARI
Eluru
RANGAREDDY
Rangareddy
HYDERABAD
Hyderabad
Nalgonda
NALGONDA
KRISHNA
Krishna
Mahbubnagar
MAHBUBNAGAR
100 MW
Guntur
GUNTUR
Kurnool
KURNOOL
400 MW
Prakasam
PRAKASAM
Uravakonda
2600
75 MW
Anantapur
ANANTAPUR
Kondapuram 1345 MW
Cuddapah
CUDDAPAH
120 MW
Nellore
NELLORE
Hindupur 680 MW
CHITTOOR
Chittoor
TAMILNADU
LEGEND
State Boundary
District Boundary
State Capital
District HQ
Source-www.mapsofindia.com
Map not to Sc
Copyright © 2011 www.mapsofindia.com
(Updated on 15th April 2011)
EXHIBIT-B2(b)

KARNATAKA
Districts
Future RE Proj in Karnataka
Wind-3223 MW
SHP- 718 MW
MAHARASHTRA
GOA
ANDHRA PRADESH
TAMIL NADU
KERALA
ARABIAN SEA
Bidar
BIDAR
Gulbarga
GULBARGA
55 MW
Bijapur
BIJAPUR
200 MW
525 MW
110 MW
Bagalkot
BAGALKOT
220 MW
Raichur
RAICHUR
32 MW
BELGAUM
9 MW
Belgaum
500 MW
KOPPAL
Koppal
Dharwar
DHARWAR
Gadag
120 MW
GADAG
Bellary
33 MW
100 MW
Karwar
UTTAR KANNAD
50 MW
HAVERI
Haveri
450 MW
DAVANGERE
Davangere
450MW
74 MW
SHIMOGA
52 MW
Chitradurga
CHITRADURGA
224 MW
Udupi
UDUPI
50 MW
175 MW
CHIKMAGALUR
70 MW
Chikmagalur
35 MW
Hassan
HASSAN
80 MW
Mangalore
DAKSHIN KANNAD
100 MW
TUMKUR
Tumkur
32 MW
KOLAR
Kolar
BANGALORE
BANGALORE (URBAN)
2 MW
120MW
MANDYA
Mandya
12 MW
8 MW
Mysore
MYSORE
9 MW
KODAGU
CHAMRAJNAGAR
Chamrajnagar
45 MW
LEGEND
State Boundary
District Boundary
State Capital
District Headquarter
Source-www.mapsofindia.com
EXHIBIT-B3(a)

KARNATAKA
Districts
RE Proj in Karnataka
Wind-5006 MW
SHP- 1245 MW
N
MAHARASHTRA
GOA
ANDHRA PRADESH
TAMIL NADU
KERALA
ARABIAN SEA
Bidar
BIDAR
Gulbarga
GULBARGA
95 MW
Bijapur
BIJAPUR
200 MW
645 MW
110 MW
Bagalkot
BAGALKOT
220 MW
Raichur
RAICHUR
55 MW
BELGAUM
16 MW
Belgaum
500 MW
KOPPAL
Koppal
Dharwar
DHARWAR
Gadag
480 MW
GADAG
Bellary
57 MW
330 MW
Karwar
UTTAR KANNAD
86 MW
HAVERI
Haveri
531 MW
DAVANGERE
Davangere
640 MW
132 MW
SHIMOGA
90MW
Chitradurga
CHITRADURGA
822 MW
Udupi
UDUPI
86 MW
175 MW
CHIKMAGALUR
121 MW
Chikmagalur
143 MW
Hassan
TUMKUR
Tumkur
32 MW
KOLAR
Kolar
3 MW
BANGALORE
BANGALORE (URBAN)
BANGALORE (RURAL)
Mangalore
DAKSHIN KANNAD
176 MW
138 MW
208 MW
MANDYA
Mandya
8 MW
Mysore
MYSORE
16 MW
20 MW
CHAMRAJNAGAR
Chamrajnagar
78 MW
LEGEND
State Boundary
District Boundary
State Capital
District Headquarter
Source-www.mapsofindia.com
EXHIBIT-B3(b)

RE Proj in Gujarat-Future
Wind -5100 MW
Solar-1400 MW
N
BANASKANTHA
450 MW
Palanpur
500 MW
PATAN
300 MW
Patan
300 MW
MAHESANA
Mahesana
Himatnagar
SABARKANTHA
RAJASTHAN
Rann of Kachchh
KACHCHH
300 MW
Bhuj
1500 MW
GANDHINAGAR
GANDHINAGAR
SURENDERNAGAR
900 MW
Surendranagar
Ahmedabad
250 MW
KHEDA
Nadiad
PANCH MAHAL
Dahod
DAHOD
Godhra
Gulf of Kachchh
Jamnagar
Rajkot
800 MW
RAJKOT
JAMNAGAR
650 MW
Anand
ANAND
Vadodara
VADODARA
MADHYA PRADESH
Rajpipla
BHARUCH
Bharuch
NARMADA
INDIA
PORBANDAR
Porbandar
Amreli
Bhavnagar
BHAVNAGAR
Junagadh
AMRELI
100 MW
JUNAGADH
350 MW
SURAT
Surat
Tapi
TAPI
Gulf of Khambhat
Navsari
NAVSARI
THE DANGS
Ahwa
ARABIAN
SEA
Valsad
VALSAD
MAHARASHTRA
LEGEND
International Boundary
State Boundary
District Boundary
State Capital
District Headquarter
Source-www.mapsofindia.com
EXHIBIT-B4(a)

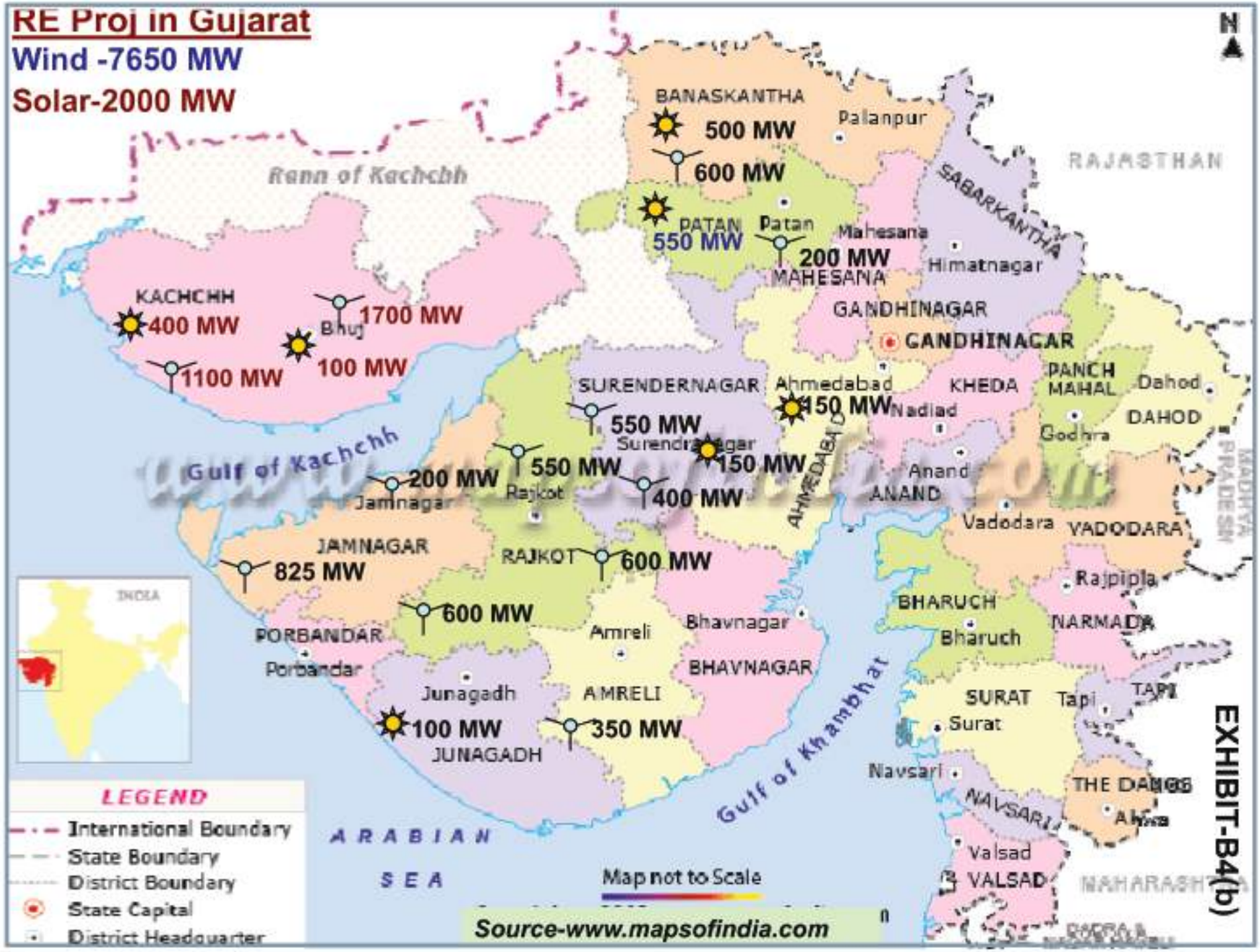
RE Proj in Gujarat
Wind -7650 MW
Solar-2000 MW
N
BANASKANTHA
500 MW
600 MW
Palanpur
RAJASTHAN
Rann of Kachchh
SABARKANTHA
PATAN
550 MW
Patan
Mahesana
200 MW
MAHESANA
Himatnagar
KACHCHH
400 MW
Bhuj
1700 MW
100 MW
1100 MW
GANDHINAGAR
GANDHINAGAR
SURENDERNAGAR
Ahmedabad
150 MW
KHEDA
Nadiad
PANCH MAHAL
Dahod
DAHOD
Godhra
550 MW
Surendranagar
150 MW
Gulf of Kachchh
200 MW
Jamnagar
550 MW
Rajkot
400 MW
AHMEDABAD
Anand
ANAND
Vadodara
VADODARA
MADHYA PRADESH
JAMNAGAR
825 MW
RAJKOT
600 MW
Rajpipla
BHARUCH
Bharuch
NARMADA
600 MW
PORBANDAR
Porbandar
Amreli
Bhavnagar
BHAVNAGAR
Junagadh
AMRELI
100 MW
350 MW
JUNAGADH
Gulf of Khambhat
SURAT
Surat
Tapi
TAPI
Navsari
NAVSARI
THE DANGS
Ahwa
Valsad
VALSAD
NAHARASHTRA
DADRA & NAGAR HAVELI
INDIA
LEGEND
International Boundary
State Boundary
District Boundary
State Capital
District Headquarter
ARABIAN SEA
Map not to Scale
Source-www.mapsofindia.com
EXHIBIT-B4(b)

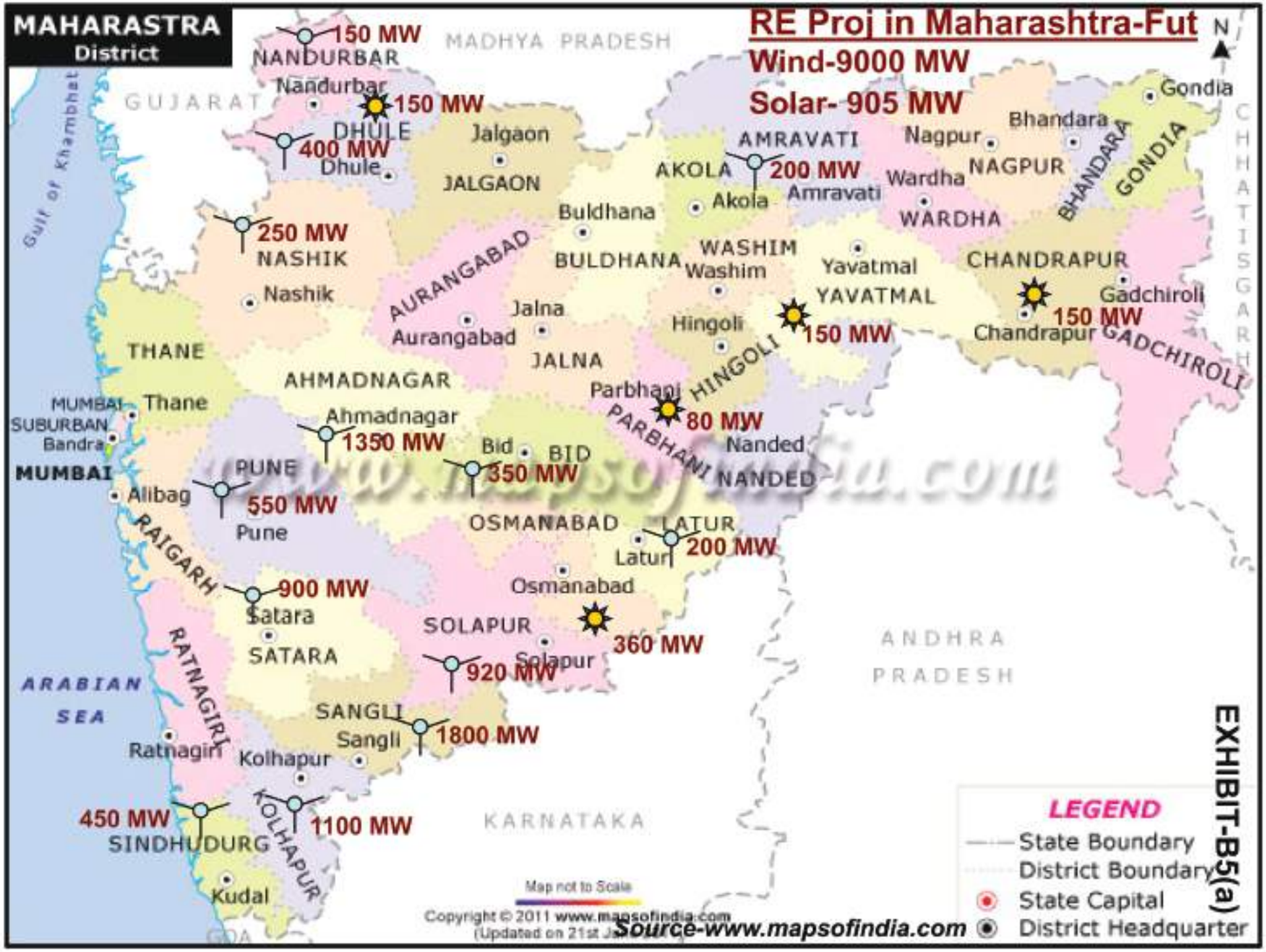
MAHARASTRA
District
RE Proj in Maharashtra-Fut
Wind-9000 MW
Solar- 905 MW
N
150 MW
NANDURBAR
Nandurbar
MADHYA PRADESH
GUJARAT
150 MW
DHULE
400 MW
Dhule
Jalgaon
JALGAON
AMRAVATI
200 MW
AKOLA
Akola
Amravati
Nagpur
NAGPUR
Wardha
WARDHA
Bhandara
BHANDARA
Gondia
GONDIA
CHHATISGARH
Gulf of Khambhat
250 MW
NASHIK
Nashik
AURANGABAD
Aurangabad
Buldhana
BULDHANA
WASHIM
Washim
Yavatmal
YAVATMAL
CHANDRAPUR
Chandrapur
Gadchiroli
GADCHIROLI
150 MW
Jalna
JALNA
Hingoli
HINGOLI
150 MW
THANE
Thane
AHMADNAGAR
Ahmadnagar
1350 MW
Parbhani
PARBHANI
80 MW
MUMBAI SUBURBAN
Bandra
MUMBAI
Alibag
PUNE
550 MW
Pune
Bid
BID
350 MW
Nanded
NANDED
OSMANABAD
Osmanabad
LATUR
Latur
200 MW
RAIGARH
900 MW
Satara
SATARA
SOLAPUR
Solapur
360 MW
920 MW
ANDHRA PRADESH
ARABIAN SEA
RATNAGIRI
Ratnagiri
SANGLI
Sangli
1800 MW
Kolhapur
KOLHAPUR
1100 MW
450 MW
SINDHUDURG
Kudal
KARNATAKA
GOA
Map not to Scale
Copyright © 2011 www.mapsofindia.com
(Updated on 21st Ja
Source-www.mapsofindia.com
LEGEND
State Boundary
District Boundary
State Capital
District Headquarter
EXHIBIT-B5(a)

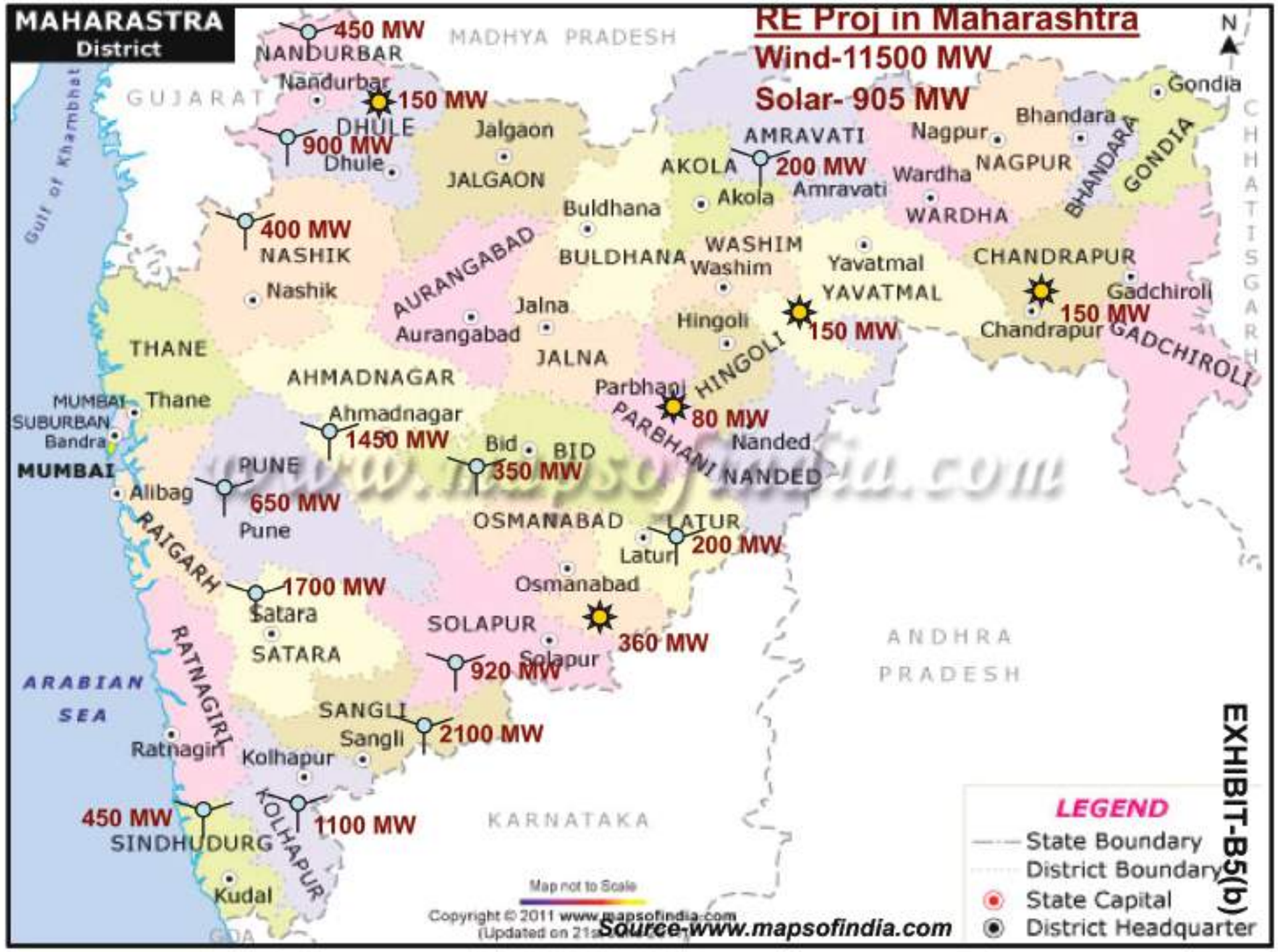
MAHARASTRA
District
RE Proj in Maharashtra
Wind-11500 MW
Solar- 905 MW
N
450 MW
NANDURBAR
Nandurbar
MADHYA PRADESH
GUJARAT
150 MW
DHULE
900 MW
Dhule
Jalgaon
JALGAON
AMRAVATI
200 MW
Amravati
AKOLA
Akola
Nagpur
NAGPUR
Bhandara
BHANDARA
Gondia
GONDIA
Wardha
WARDHA
CHHATISGARH
Gulf of Khambhat
400 MW
NASHIK
Nashik
Buldhana
BULDHANA
AURANGABAD
Aurangabad
Jalna
JALNA
WASHIM
Washim
Yavatmal
YAVATMAL
CHANDRAPUR
Chandrapur
Gadchiroli
GADCHIROLI
150 MW
Hingoli
HINGOLI
150 MW
THANE
Thane
AHMADNAGAR
Ahmadnagar
1450 MW
MUMBAI SUBURBAN
Bandra
MUMBAI
Parbhani
PARBHANI
80 MW
Nanded
NANDED
Bid
BID
350 MW
PUNE
Alibag
650 MW
Pune
OSMANABAD
LATUR
Latur
200 MW
RAIGARH
1700 MW
Satara
SATARA
Osmanabad
SOLAPUR
Solapur
360 MW
920 MW
ANDHRA PRADESH
ARABIAN SEA
RATNAGIRI
Ratnagiri
SANGLI
Sangli
2100 MW
Kolhapur
KOLHAPUR
1100 MW
450 MW
SINDHUDURG
Kudal
KARNATAKA
GOA
Map not to Scale
Copyright © 2011 www.mapsofindia.com
(Updated on 21st
Source-www.mapsofindia.com
LEGEND
State Boundary
District Boundary
State Capital
District Headquarter
EXHIBIT-B5(b)

RAJASTHAN
District Map
INDIA
Future RE Proj in Rajasthan
Wind-2000 MW
Solar- 3700 MW
N
PAKISTAN
HARYANA
UTTAR PRADESH
MADHYA PRADESH
GUJARAT
Sri Ganganagar
SRI GANGANAGAR
Hanumangarh
HANUMANGARH
BIKANER
625 MW
Bikaner
Churu
CHURU
Jhunjhunun
JHUNJHUNUN
Sikar
SIKAR
Alwar
ALWAR
1900 MW
JAISALMER
1400 MW
Jaisalmer
1125 MW
JODHPUR
Nagaur
NAGAUR
Dausa
DAUSA
BHARATPUR
Bharatpur
Dholpur
DHOLPUR
JAIPUR
JAIPUR
Karauli
KARAULI
Sawai Madhopur
SAWAI MADHOPUR
Jodhpur
Ajmer
AJMER
Tonk
TONK
50 MW
BARMER
Barmer
Pali
PALI
BHILWARA
Bhilwara
Bundi
BUNDI
KOTA
Kota
Baran
BARAN
100 MW
Jalor
JALOR
Sirohi
SIROHI
Rajsamand
RAJSAMAND
Chittaurgarh
CHITTAURGARH
Jhalawar
JHALAWAR
Udaipur
UDAIPUR
PRATAPGARH
250 MW
Pratapgarh
Dungarpur
DUNGARPUR
Banswara
250 MW
BANSWARA
LEGEND
International Boundary
State Boundary
District Boundary
State Headquarter
District Headquarter
Source-www.mapsofindia.com
EXHIBIT-B6(a)

RAJASTHAN
District Map
INDIA
RE Proj in Rajasthan
Wind-4100 MW
Solar- 3940 MW
PUNJAB
HARYANA
UTTAR PRADESH
PAKISTAN
GUJARAT
MADHYA PRADESH
Sri Ganganagar
SRI GANGANAGAR
Hanumangarh
HANUMANGARH
BIKANER
665 MW
Bikaner
Churu
CHURU
Jhunjhunun
JHUNJHUNUN
Sikar
SIKAR
Alwar
ALWAR
2000 MW
JAISALMER
3120 MW
Jaisalmer
1225 MW
Nagaur
NAGAUR
JODHPUR
100 MW
Jodhpur
JAIPUR
Dausa
DAUSA
BHARATPUR
Bharatpur
Dholpur
DHOLPUR
Karauli
KARAULI
Sawai Madhopur
SAWAI MADHOPUR
Ajmer
AJMER
Tonk
TONK
50 MW
BARMER
Barmer
240 MW
Pali
PALI
Jalor
JALOR
Sirohi
SIROHI
Rajsamand
RAJSAMAND
BHILWARA
Bhilwara
Chittaurgarh
CHITTAURGARH
Bundi
BUNDI
KOTA
Kota
Baran
BARAN
Jhalawar
JHALAWAR
Udaipur
UDAIPUR
PRATAPGARH
320 MW
Pratapgarh
Dungarpur
DUNGARPUR
Banswara
320 MW
BANSWARA
LEGEND
International Boundary
State Boundary
District Boundary
State Headquarter
District Headquarter
Source-www.mapsofindia.com
Map not to Scale
Copyright © 2009 www.mapsofindia.com
(Last Updated on 9th Dec 2009)
EXHIBIT-B6(b)

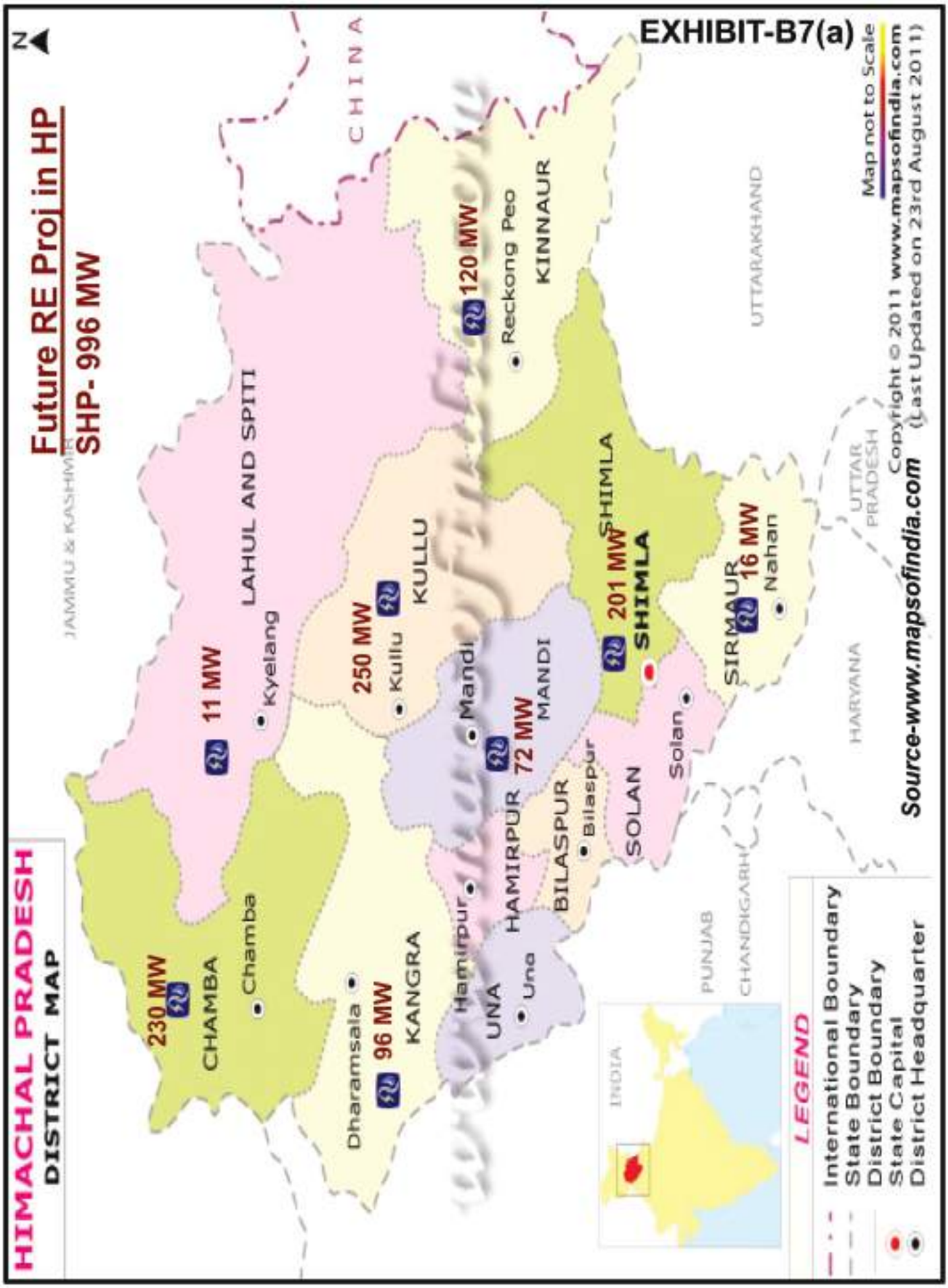
EXHIBIT-B7(a)
Future RE Proj in HP
SHP- 996 MW
HIMACHAL PRADESH
DISTRICT MAP
N
JAMMU & KASHMIR
CHINA
LAHUL AND SPITI
Kyelang
11 MW
230 MW
CHAMBA
Chamba
250 MW
Kullu
KULLU
Mandi
72 MW
MANDI
120 MW
Reckong Peo
KINNAUR
SHIMLA
201 MW
SHIMLA
SIRMAUR
16 MW
Nahan
UTTARAKHAND
UTTAR PRADESH
HARYANA
Dharamsala
96 MW
KANGRA
Hamirpur
HAMIRPUR
UNA
Una
BILASPUR
Bilaspur
SOLAN
Solan
PUNJAB
CHANDIGARH
INDIA
LEGEND
International Boundary
State Boundary
District Boundary
State Capital
District Headquarter
Map not to Scale
Copyright © 2011 www.mapsofindia.com
(Last Updated on 23rd August 2011)
Source-www.mapsofindia.com

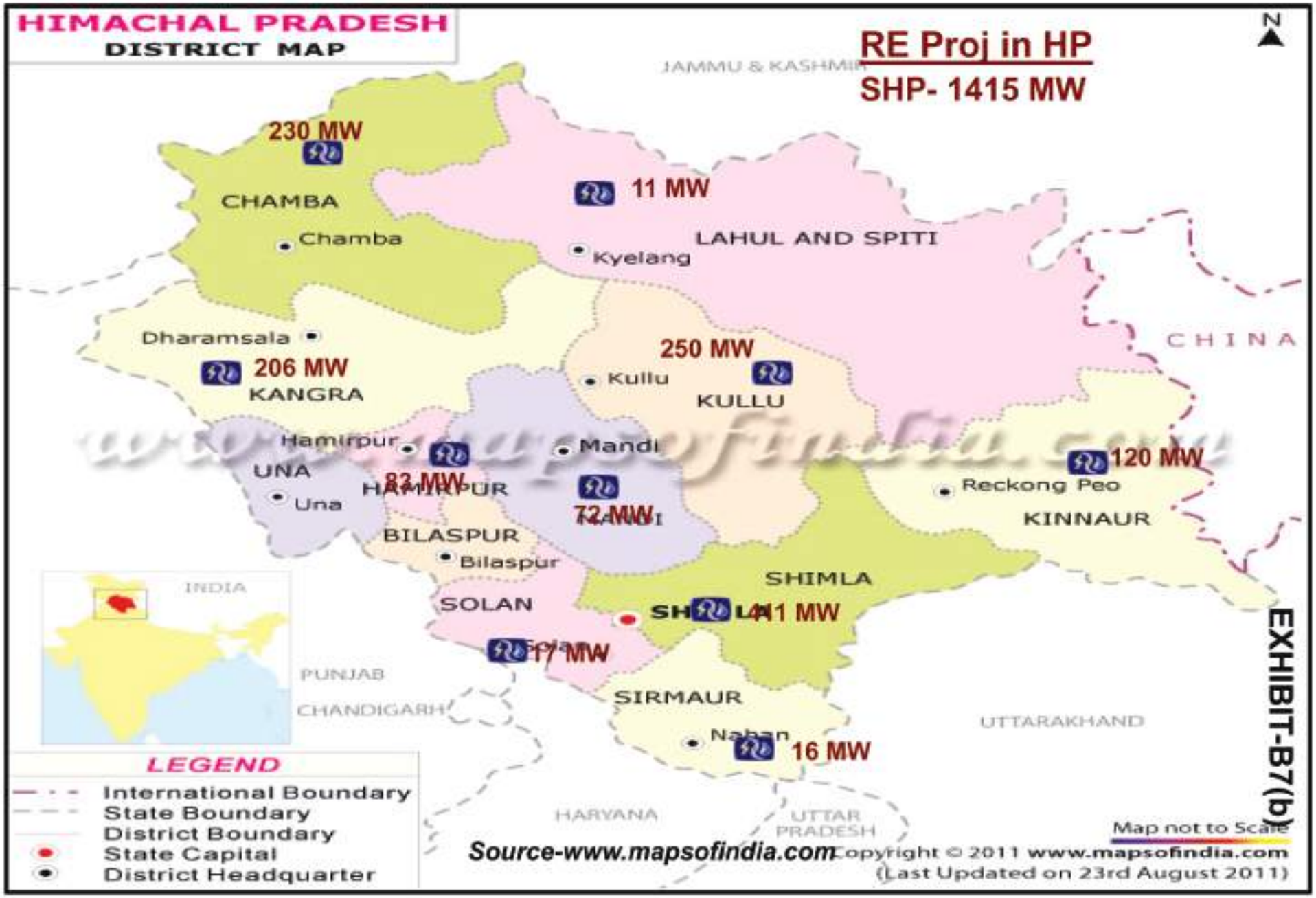
HIMACHAL PRADESH
DISTRICT MAP
RE Proj in HP
SHP- 1415 MW
N
JAMMU & KASHMIR
230 MW
CHAMBA
Chamba
11 MW
LAHUL AND SPITI
Kyelang
Dharamsala
206 MW
KANGRA
250 MW
Kullu
KULLU
CHINA
Hamirpur
Mandi
UNA
Una
83 MW
HAMIRPUR
72 MW
120 MW
Reckong Peo
KINNAUR
BILASPUR
Bilaspur
SHIMLA
SOLAN
41 MW
17 MW
INDIA
PUNJAB
CHANDIGARH
SIRMAUR
Nahan
16 MW
UTTARAKHAND
HARYANA
UTTAR PRADESH
LEGEND
International Boundary
State Boundary
District Boundary
State Capital
District Headquarter
Source-www.mapsofindia.com
Copyright © 2011 www.mapsofindia.com
(Last Updated on 23rd August 2011)
Map not to Scale

EXHIBIT-B7(b)

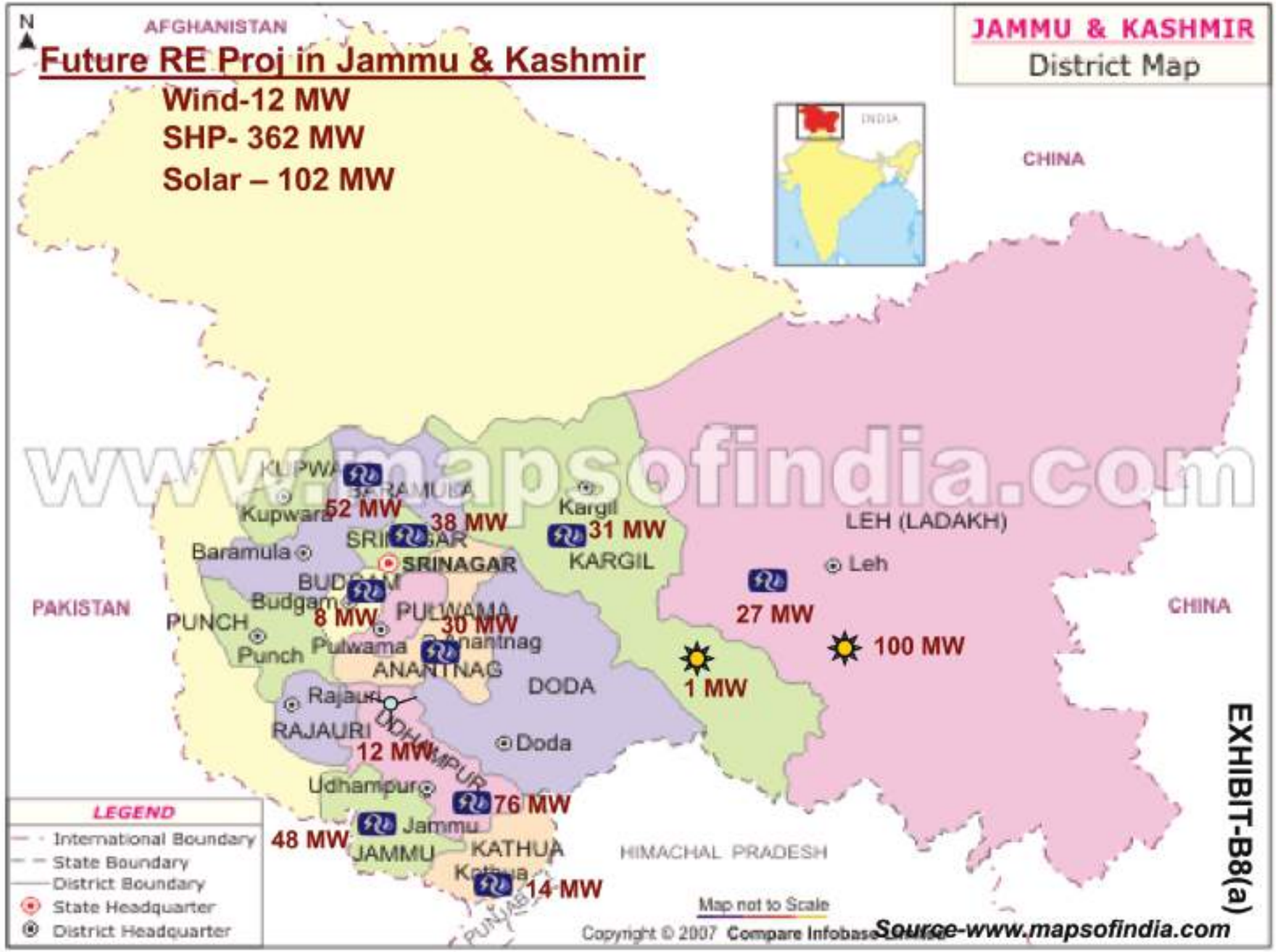
Future RE Proj in Jammu & Kashmir
Wind-12 MW
SHP- 362 MW
Solar – 102 MW
JAMMU & KASHMIR
District Map
N
AFGHANISTAN
PAKISTAN
CHINA
CHINA
HIMACHAL PRADESH
PUNJAB
INDIA
LEH (LADAKH)
Leh
Kargil
KARGIL
Kupwara
Baramula
SRINAGAR
Budgam
PULWAMA
Pulwama
Anantnag
ANANTNAG
PUNCH
Punch
Rajauri
RAJAURI
DODA
Doda
Udhampur
Jammu
JAMMU
KATHUA
Kathua
52 MW
38 MW
31 MW
8 MW
30 MW
27 MW
100 MW
1 MW
12 MW
76 MW
48 MW
14 MW
LEGEND
International Boundary
State Boundary
District Boundary
State Headquarter
District Headquarter
Map not to Scale
Copyright © 2007 Compare Infobase Limited
www.mapsofindia.com
Source-www.mapsofindia.com

EXHIBIT-B8(a)

EXHIBIT-B8(b)
JAMMU & KASHMIR
District Map
RE Proj in Jammu & Kashmir
Wind-12 MW
SHP- 480 MW
Solar – 104 MW
AFGHANISTAN
CHINA
CHINA
PAKISTAN
HIMACHAL PRADESH
LEH (LADAKH)
Leh
102 MW
35 MW
1 MW
Kargil
37 MW
KARGIL
DODA
Doda
111 MW
KATHUA
23 MW
Jammu
JAMMU
48 MW
Udhampur
12 MW
RAJAURI
Rajauri
ANANTNAG
Anantnag
33 MW
Pulwama
25 MW
Punch
PUNCH
Budgam
BUDGAM
SRINAGAR
76 MW
Baramula
Kupwara
52 MW
Map not to Scale
Copyright © 2007 Compare Infobase
Source-www.mapsofindia.com
LEGEND
International Boundary
State Boundary
District Boundary
State Headquarter
District Headquarter

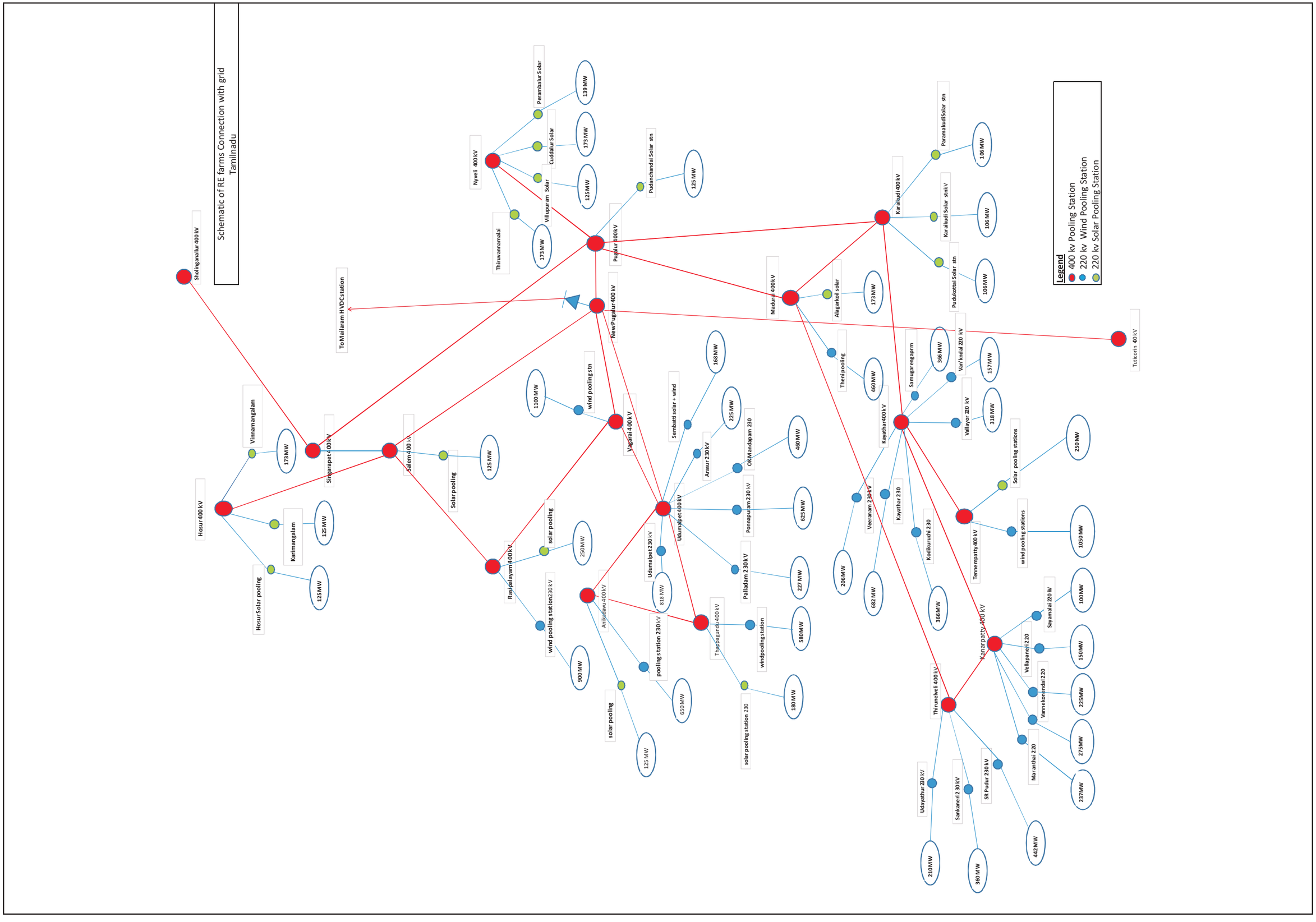
Schematic of RE farms Connection with grid
Tamilnadu
Legend
400 kv Pooling Station
220 kv Wind Pooling Station
220 kv Solar Pooling Station
Sholinganallur 400 kV
Hosur 400 kV
Vinnamangalam
173MW
Karimangalam
125 MW
125MW
Hosur Solar pooling
Singarapet 400 kV
Salem 400 kV
125 MW
Solar pooling
To Mailaram HVDC station
Nyveli 400 kV
Thiruvannamalai
173MW
Villupuram Solar
125MW
Cuddalur Solar
173 MW
Perambalur Solar
139MW
Pugalur 400 kV
Pudanchandai Solar stn
125 MW
New Pugalur 400 kV
1100 MW
wind pooling stn
Vagarai 400 kV
Rasipalayam 400 kV
solar pooling
250 MW
wind pooling station 230 kV
900 MW
Anikadavu 400 kV
solar pooling
125 MW
pooling station 230 kV
650 MW
Udumalpet 230 kV
818 MW
Sembatti solar + wind
168MW
225 MW
Arasur 230 kV
OKMandapam 230
460 MW
Udumalpet 400 kV
Ponnapuram 230 kV
625MW
Palladam 230 kV
227 MW
windpooling station
580MW
Thappagundu 400 kV
solar pooling station 230
180 MW
Madurai 400 kV
Alagarkoil solar
173MW
Theni pooling
460MW
Karaikudi 400 kV
Paramakudi Solar stn
106 MW
Karaikudi Solar stn kV
106 MW
Pudukottai Solar stn
106MW
Samugarengaprm
366 MW
Van'kndal 220 kV
157MW
Vallayor 220 kV
318 MW
Kayathar 400 kV
Solar pooling stations
250MW
Veeramam 230 kV
206MW
682 MW
Kayathar 230
Kodikuruchi 230
366MW
Tennempatty 400 kV
wind pooling stations
1050 MW
Thirunelveli 400 kV
Udayathur 230 kV
210MW
Sankaneri 230 kV
360 MW
SR Pudur 230 kV
442MW
Kanarpatty 400 kV
Marathai 220
237MW
Vannekonindai 220
275MW
Vellapanni 220
225MW
Sayamalai 220 W
150MW
100MW
Tuticorin 400 kV

BLANK

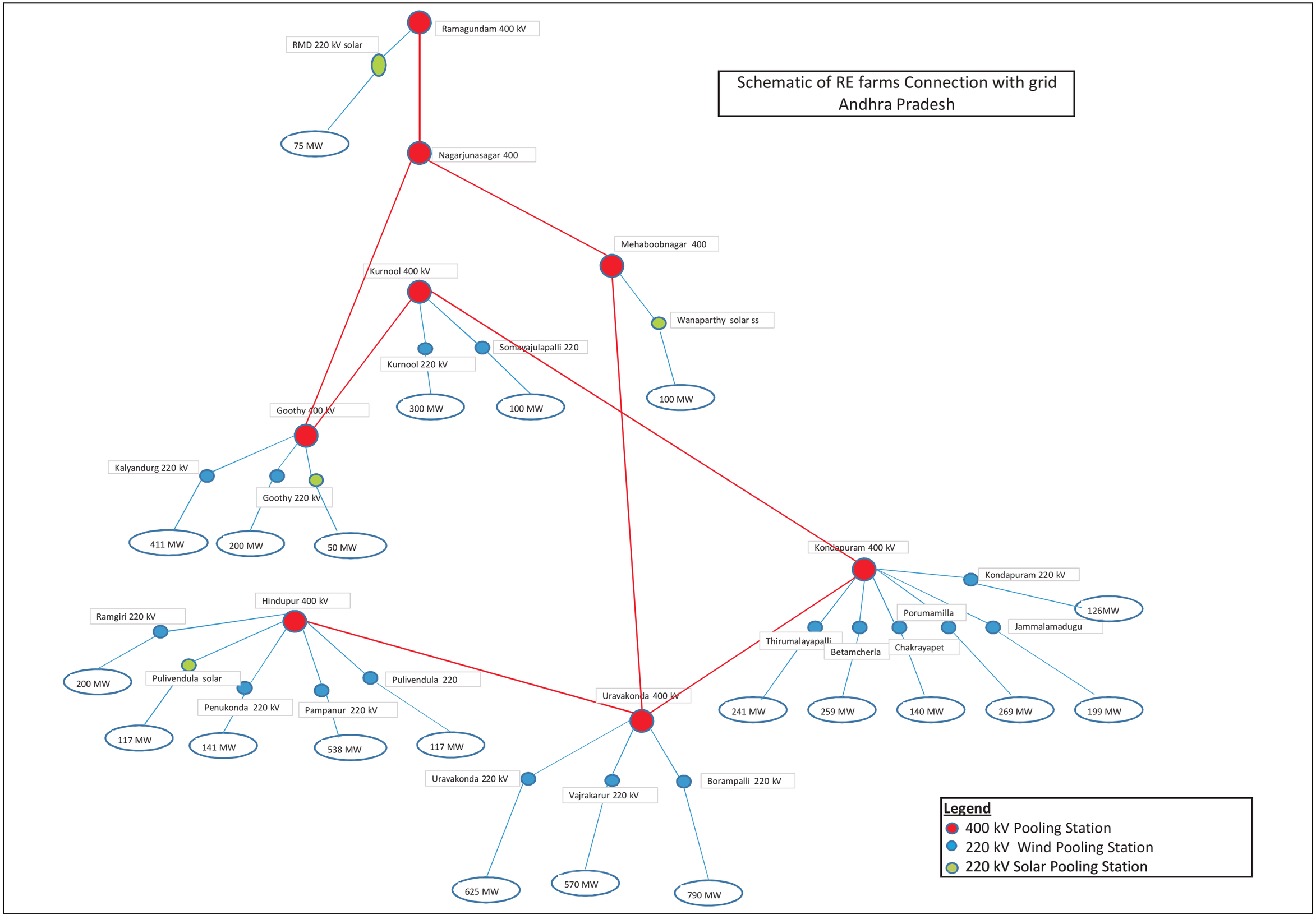
Schematic of RE farms Connection with grid
Andhra Pradesh
Ramagundam 400 kV
RMD 220 kV solar
75 MW
Nagarjunasagar 400
Mehaboobnagar 400
Wanaparthy solar ss
100 MW
Kurnool 400 kV
Kurnool 220 kV
Somayajulapalli 220
300 MW
100 MW
Goothy 400 kV
Kalyandurg 220 kV
Goothy 220 kV
411 MW
200 MW
50 MW
Kondapuram 400 kV
Kondapuram 220 kV
126MW
Porumamilla
Jammalamadugu
Thirumalayapalli
Betamcherla
Chakrayapet
241 MW
259 MW
140 MW
269 MW
199 MW
Hindupur 400 kV
Ramgiri 220 kV
200 MW
Pulivendula solar
117 MW
Penukonda 220 kV
141 MW
Pampanur 220 kV
538 MW
Pulivendula 220
117 MW
Uravakonda 400 kV
Uravakonda 220 kV
Vajrakarur 220 kV
Borampalli 220 kV
625 MW
570 MW
790 MW
Legend
400 kV Pooling Station
220 kV Wind Pooling Station
220 kV Solar Pooling Station

BLANK

SCHEMATIC DIAGRAM OFKARNATAKA RE SCHEME 2016-17

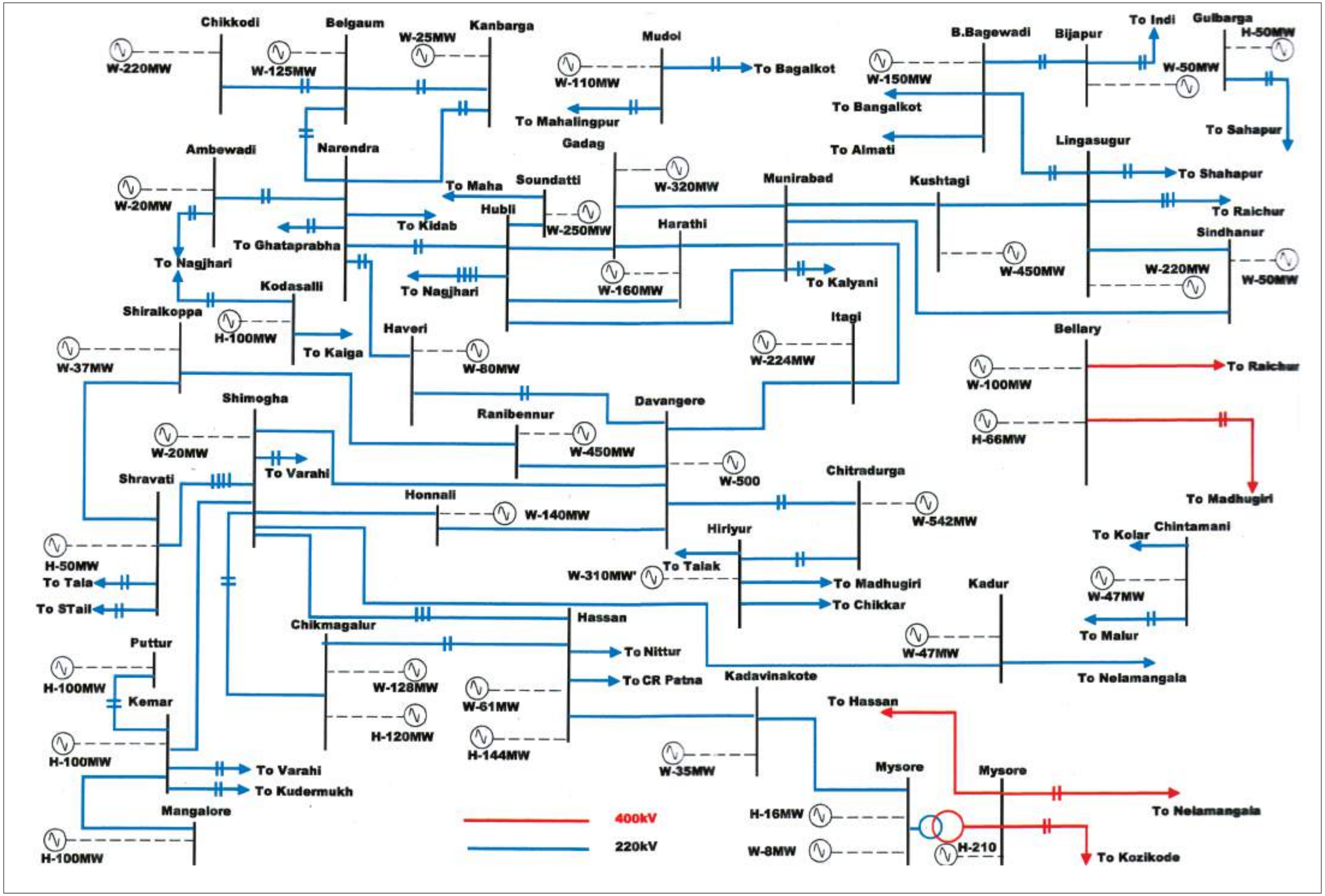

BLANK

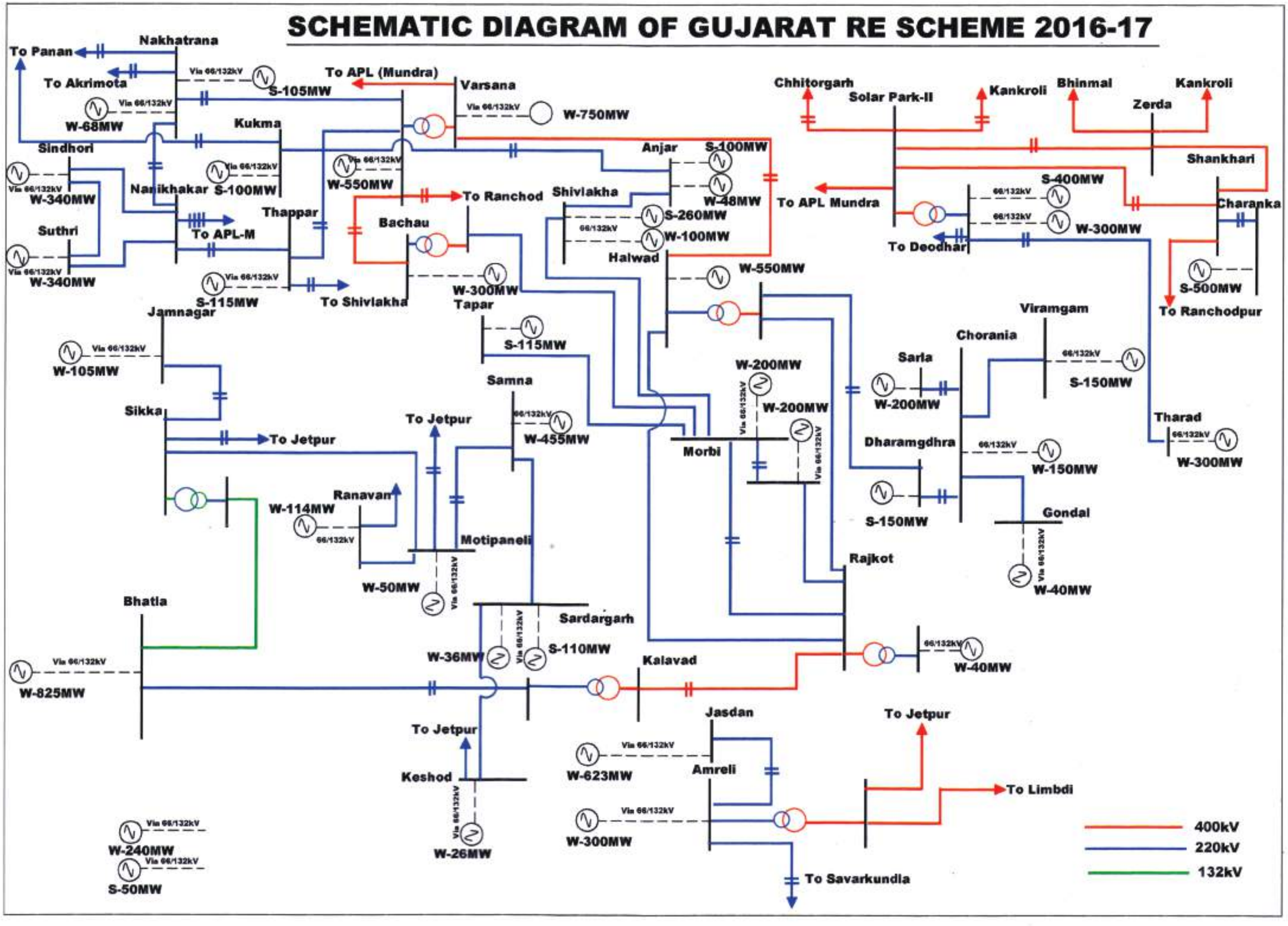
SCHEMATIC DIAGRAM OF GUJARAT RE SCHEME 2016-17
To Panan
Nakhatrana
To Akrimota
Via 66/132kV
S-105MW
To APL (Mundra)
Varsana
W-68MW
W-750MW
Kukma
Sindhori
Anjar
S-100MW
W-340MW
Narikhakar
S-100MW
W-550MW
To Ranchod
Shivlakha
W-48MW
Thappar
Bachau
S-260MW
Suthri
To APL-M
W-100MW
Halwad
W-340MW
S-115MW
To Shivlakha
W-300MW
Tapar
W-550MW
Jamnagar
S-115MW
W-105MW
Samna
W-200MW
Sikka
To Jetpur
W-455MW
W-200MW
To Jetpur
Morbi
Ranavan
W-114MW
Motipaneli
W-50MW
Bhatia
Sardargarh
W-36MW
S-110MW
W-825MW
Kalavad
To Jetpur
Keshod
W-26MW
Jasdan
W-623MW
Amreli
W-300MW
To Jetpur
To Limbdi
To Savarkundla
W-240MW
S-50MW
Chhitorgarh
Solar Park-II
Kankroli
Bhinmal
Zerda
Kankroli
Shankhari
S-400MW
To APL Mundra
Charanka
W-300MW
To Deodhar
S-500MW
To Ranchodpur
Viramgam
Chorania
Sarla
S-150MW
W-200MW
Tharad
Dharamgdhra
W-150MW
W-300MW
S-150MW
Gondal
Rajkot
W-40MW
W-40MW
400kV
220kV
132kV

BLANK

SCHEMATIC DIAGRAM OF MAHARASHTRA RE SCHEME 2016-17

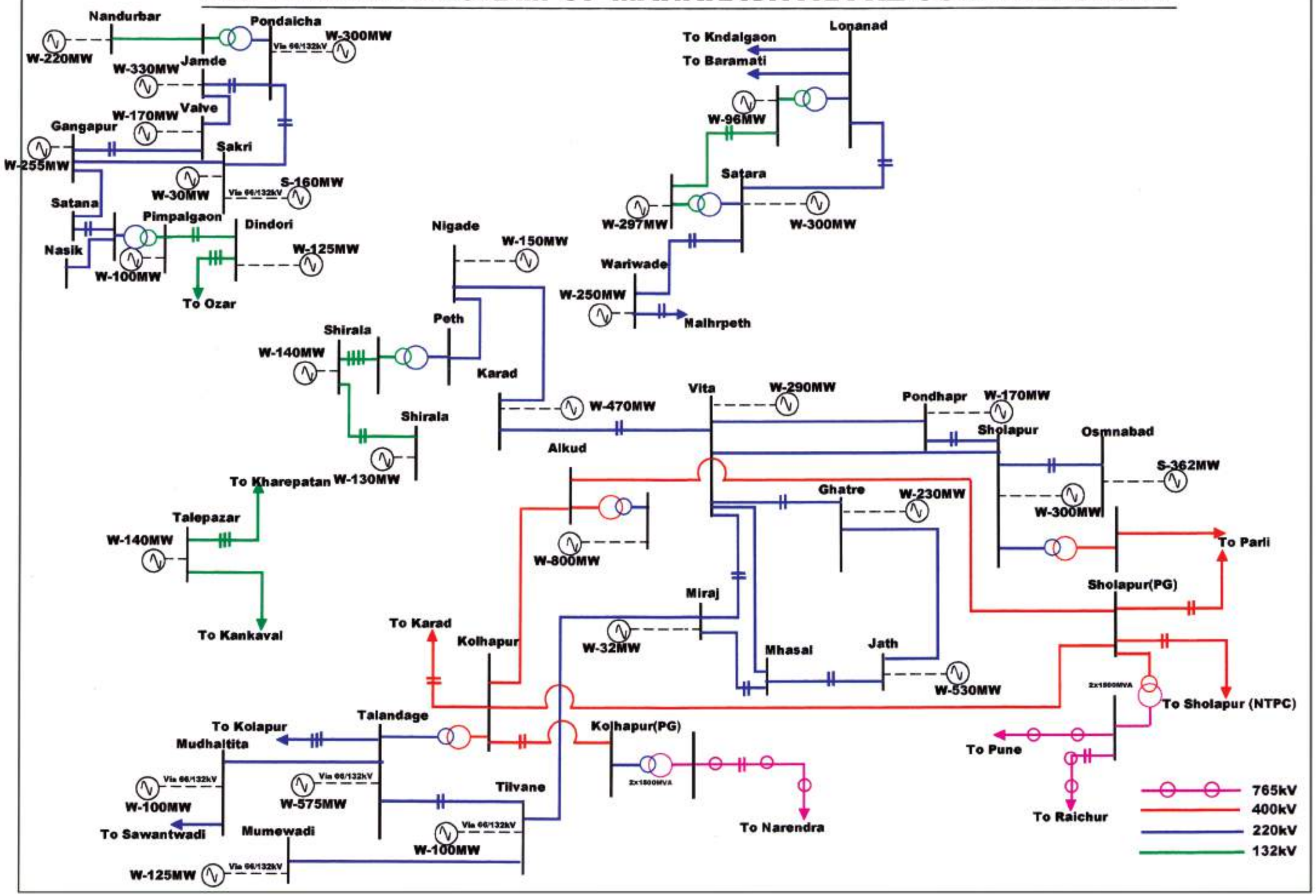

BLANK

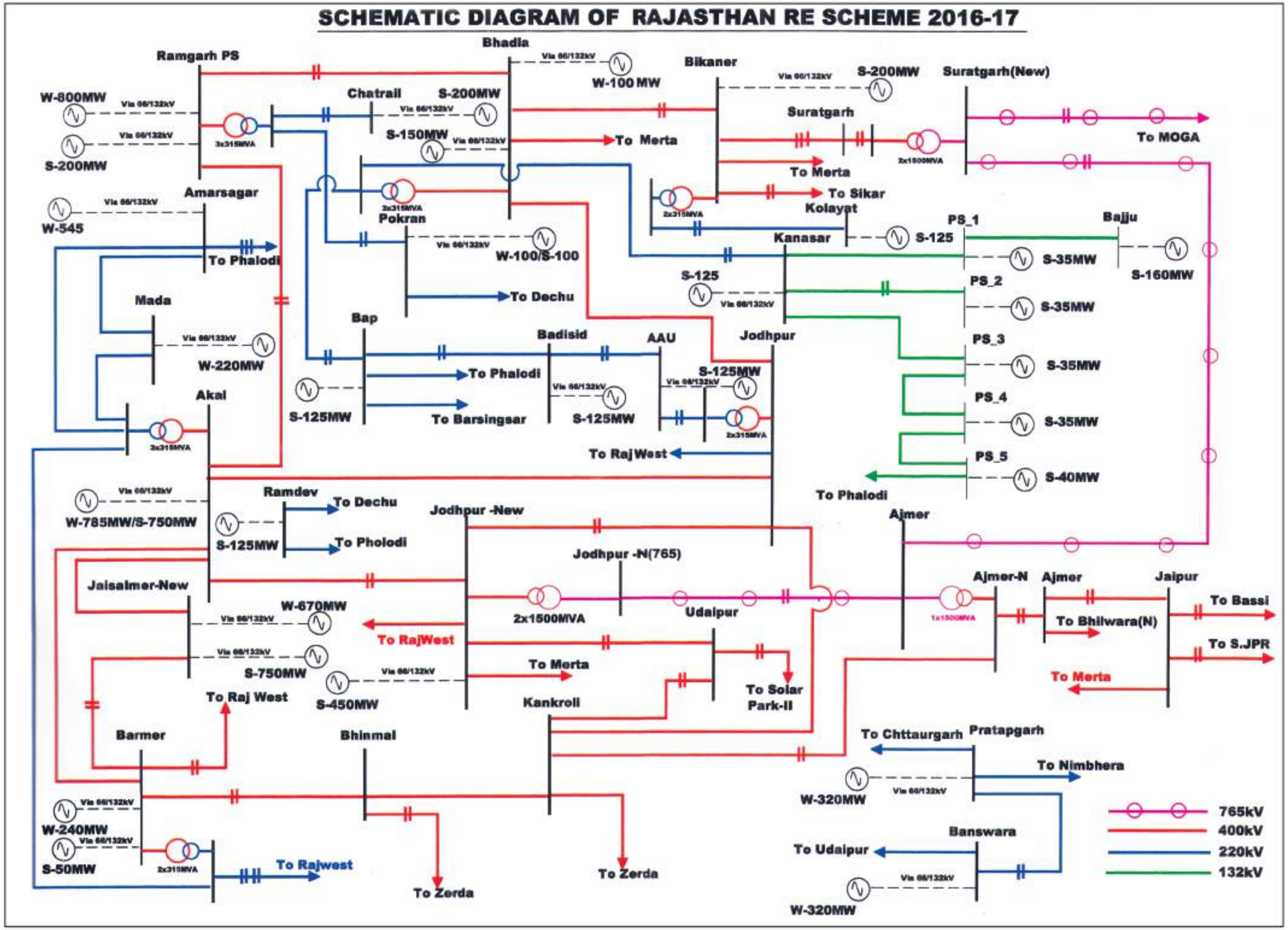
SCHEMATIC DIAGRAM OF RAJASTHAN RE SCHEME 2016-17
Ramgarh PS
W-800MW
S-200MW
Amarsagar
W-545
To Phalodi
Mada
W-220MW
Akal
W-785MW/S-750MW
Jaisalmer-New
W-670MW
S-750MW
To Raj West
S-450MW
Barmer
W-240MW
S-50MW
To Rajwest
Bhadla
W-100 MW
Chatrail
S-200MW
S-150MW
To Merta
Pokran
W-100/S-100
To Dechu
Bap
S-125MW
To Barsingsar
To Phalodi
Badisid
S-125MW
AAU
S-125MW
To RajWest
Ramdev
To Dechu
S-125MW
To Phalodi
Jodhpur -New
Jodhpur -N(765)
2x1500MVA
Udaipur
To RajWest
To Merta
Kankroli
To Solar Park-II
Bhinmal
To Zerda
To Zerda
Bikaner
S-200MW
Suratgarh
To Merta
To Sikar
Kolayat
Kanasar
S-125
S-125
Jodhpur
To Phalodi
Suratgarh(New)
To MOGA
PS_1
S-35MW
PS_2
S-35MW
PS_3
S-35MW
PS_4
S-35MW
PS_5
S-40MW
Bajju
S-160MW
Ajmer
Ajmer-N
Ajmer
Jaipur
To Bassi
To Bhilwara(N)
To S.JPR
To Merta
To Chttaurgarh
Pratapgarh
To Nimbhera
W-320MW
Banswara
To Udaipur
W-320MW
765kV
400kV
220kV
132kV

BLANK

SCHEMATIC DIAGRAM OF HP RE SCHEME 2016-17

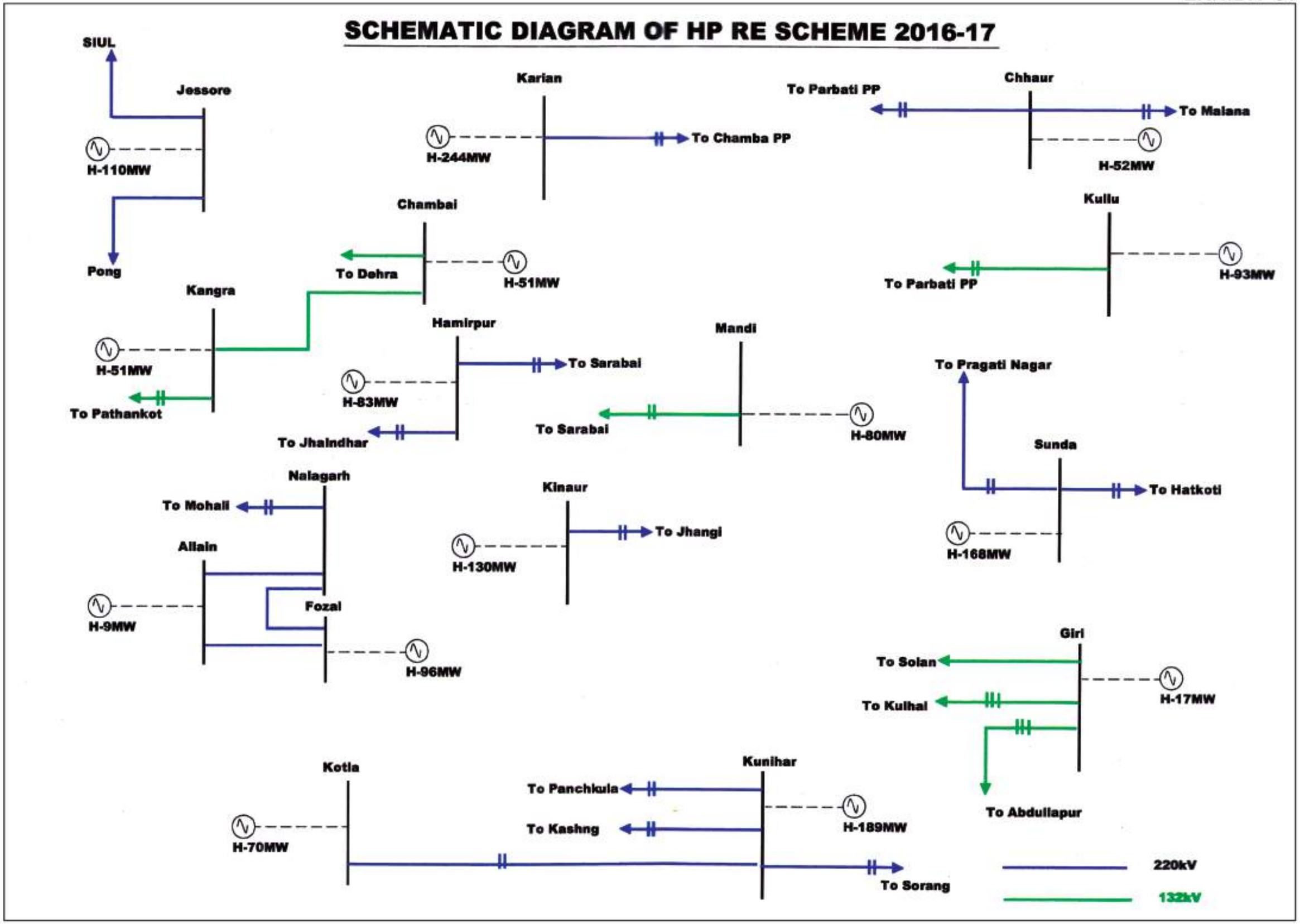

BLANK

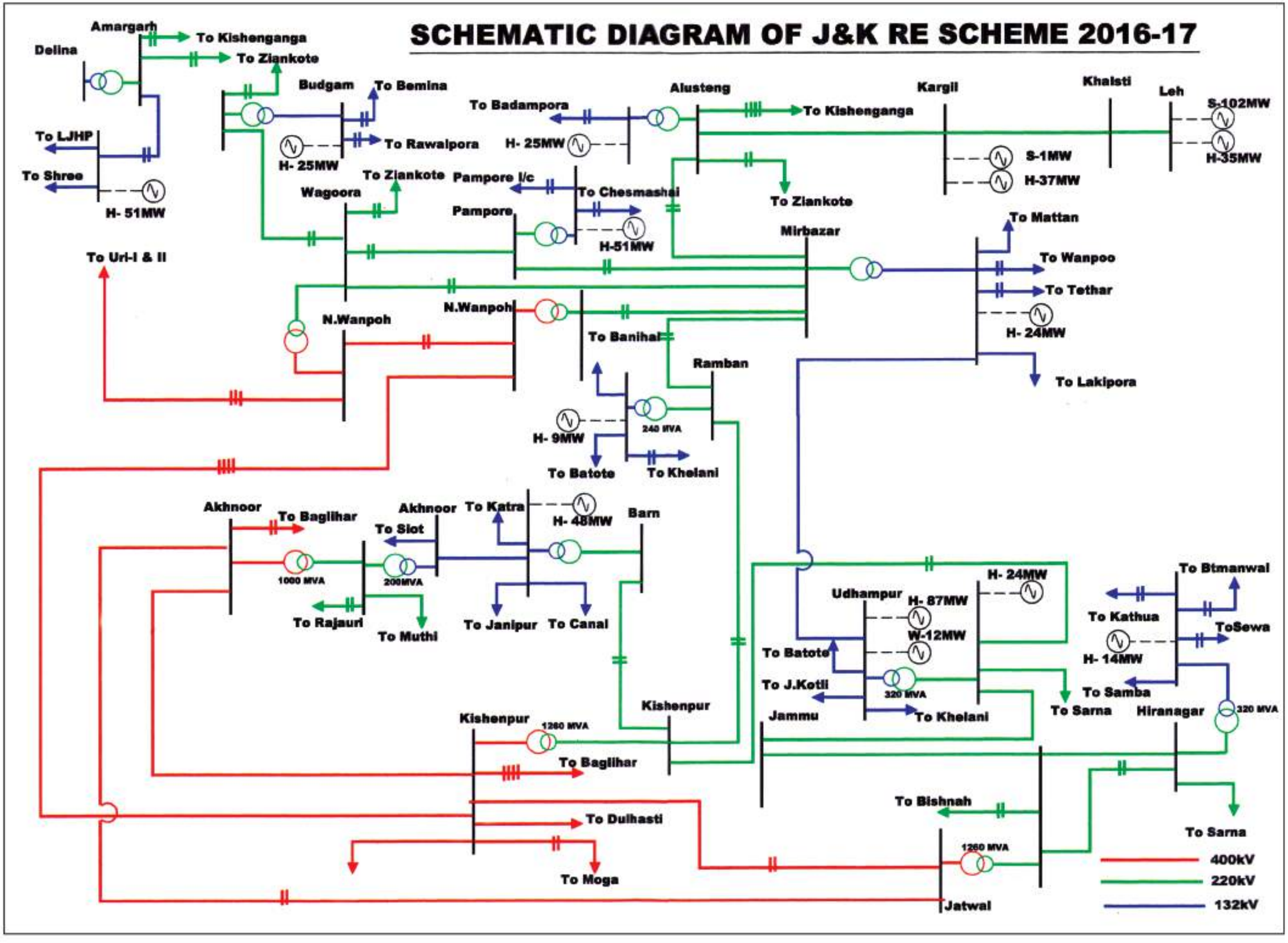
SCHEMATIC DIAGRAM OF J&K RE SCHEME 2016-17
Amargarh
To Kishenganga
Delina
To Ziankote
Budgam
To Bemina
To Badampora
Alusteng
To Kishenganga
Kargil
Khalsti
Leh
S-102MW
H-35MW
To LJHP
H- 25MW
To Rawalpora
H- 25MW
S-1MW
H-37MW
To Shree
H- 51MW
To Ziankote
Pampore I/c
To Chesmashai
To Ziankote
Wagoora
Pampore
H-51MW
Mirbazar
To Mattan
To Wanpoo
To Uri-I & II
To Tethar
N.Wanpoh
N.Wanpoh
To Banihal
H- 24MW
Ramban
To Lakipora
240 MVA
H- 9MW
To Batote
To Khelani
Akhnoor
To Baglihar
Akhnoor
To Katra
H- 48MW
Barn
To Siot
1000 MVA
200MVA
To Rajauri
To Muthi
To Janipur
To Canal
H- 24MW
Udhampur
H- 87MW
W-12MW
To Btmanwal
To Kathua
ToSewa
H- 14MW
To Batote
To J.Kotli
320 MVA
To Samba
To Sarna
Hiranagar
320 MVA
Kishenpur
1260 MVA
Kishenpur
Jammu
To Khelani
To Baglihar
To Bishnah
To Dulhasti
To Sarna
1260 MVA
To Moga
Jatwal
400kV
220kV
132kV

BLANK

APPENDIX

BLANK

Appendix-I

TAMILNADU

M Srinivasarao

From:	eddivision@teda.in
Sent:	18 January 2012 17:53
To	V K Sehga
Cc:	gm@teda.in, M Srinivasarao
Subject:	Identification of Transmission infrastructure for likely capacity addition of RE based Power plants in 12th Plan - Yearwise RE capacity and future capacity addition of RE furnished - Reg.
Attachments:	2700_18.1.12.docx

Sir,

A copy of the D.O.letter along with Annexure already sent to you on 13.01.2012 is now sent by email, showing the attachment as requested by the Deputy Chief Design Engineer Thiru. M.S.Rao of Power Grid Corporation of India Ltd., requesting for favour of further action.

With respectful regards,

T.Elumalai
Deputy General Manager/R&D
Tamil Nadu Energy Development Agency,
Chennai - 6

D.O.Lr.No.:2700/R&D/TEDA/2011 DATED 13-01-2012

Dear Sir,

Sub: Identification of Transmission infrastructure for likely capacity addition of RE based Power Plants in 12th Plan - year wise RE capacity and future capacity additional of RE furnished

Ref: Lre Director Smart Grid, PGCOIL's Lr.No C/SG/06-RES/02 dated 5th Jan 2012

****

While on receipt of the letter under reference, I am to state that the details of proposed capacity addition on the basis of application processed in respect of Tamil Nadu State furnished in annexure is found to be incorrect. Hence the details in respect of likely capacity addition of Renewable Energy for the state of Tamilnadu is enclosed herewith.

It is requested that the furnished details may please be corrected for inclusion towards the study for evolution of transmission infrastructure for the likely capacity addition for Renewable Energy for the Twelfth five year plan in respect of Tamil Nadu State.

With regards.

Yours sincerely,

Sd/- (13.01.2012)

(Sudeep Jain)

Enc: Annexure

To
Thiru V.K.Sehgal
Executive Director (Smart Grid)
Power Grid Corporation of India Ltd
"Saudamini" Plot No 2 Sector -29
Gurgaon - 122 001

Copy To

1. Thiru Ramesh Kumar Khanna, IAS.,
   Principal Secretary to Government
   Energy Department
   Secretariat
   Chennai 600009

2. The Secretary
   Ministry of New and Renewable Energy
   Block No 14, CGO Complex
   Lodi Road,
   New Delhi - 110003

TAMILNADU

A. Future – Potential Capacity (MW)

Wind	6000
Solar	3000
Small Hydro	100
Bio mass/Waste to Energy	1550
Others(Ocean,Wave,Tide,Geo thermal,Hydrogen etc)	15
Total	10,665

B. RES Capacity Addition Programme in (2th) Plan

Year	2012-13	2013-14	2014-15	2015-16	2016-17
Type					
Wind	1200	1200	1200	1200	1200
Solar	200	500	600	800	900
Small Hydro	20	20	20	20	20
Bio mass/Waste to Energy	250	280	315	325	360
Others(Ocean,Wave,Tide,Geo thermal,Hydrogen etc)			15		
Total	1670	2000	2150	2145	2480

Total Capacity : 10,665 MW

CAPACITY ADDITIONS FOR SOLAR GENERATION IN TAMIL NADU -YEARWISE DETAILS

SI.NO	FINANCIAL/ACCOUNTING YEAR	NAME OF THE DISTRICT TO WHICH POWER GENERATION IS TO BE ADDED	CAPACITY TO BE ADDED FOR SOLAR POWER	ADDITIONAL CAPACITY ADDITIONS FROM BIOMASS POWER	TOTAL CAPACITY TO BE ADDED FOR THE FINANCIAL YEAR
1	2012-2013	Ariyalur Dindigul Perambalur Ramanathapuram Sivaganga VirudhuNagar	200 MW	250 MW	450 MW
2	2013-2014	Cuddalore Madura Pudukkottai Thiruvannamalai Vellore	500MW	280 MW	780 MW
3	2014-2015	Coimbatore Dharmapuri Erode Karur Krishnagiri Namakkal Salem Theni Tirunelveli Trichy Tiruppathukudi Villupuram	600 MW	315 MW	915 MW
4	2015-2016	Ariyalur Dindigal Perambalur Ramanathapuram Sivaganga VirudhuNagar Cuddalore Madurai Pudukkottai Thiruvannamalai Vellore	800 MW	325 MW	1125 MW
5	2016-2017	Coimbatore Dharmapuri Erode Karur Krishnagiri Namakkal Salem Theni Tirunelveli Trichy Tiruppathukudi Villupuram	900 MW	360 MW	1260 MW

CONNECTED LOAD IN FEEDER WISE

WIND FARM SUBSTATIONS IN TIRUNELVELI WE AREA - OCT - 2011

Sl.No	Name Of Sub-station & Name of Feeder	Voltage	Connected Load No.of WEG	Connected Load MW	Remarks
I	AYYANARUTHU 110/11 KV SS				
	3 x 16 MVA Pr.Tr		197	63.780	
1	Ayyanaruthu feeder	11Kv	31	6.340	
		Totals:			
2	MBUL feeder II	11kv	11	5.500	
3	MBUL feeder I	11Kv	21	4.725	
4	Panchalankuri feeder	11kv	35	5.860	
5	NEPC Feeder	11kv	17	4.450	
6	Subaru feeder	11kv	18	5.030	
7	Anhani feeder	11kv	17	7.750	
8	Pioneer feeder	11kv	21	5.425	
9	G.K W.Feeder.	11kv	11	5.750	
10	Westmann feeder	11kv	5	4.050	
11	We Wind feeder	11kv	4	4.000	
12	GWPL feeder	11kv	8	4.800	
	2 x 25 MVA Pr.Tr		55	35.950	
13	33 KV Eyvan Sakthi feeder	33 KV	21	10.750	
14	33 KV RRB energy feeder	33 KV	22	13.200	
15	33KV Win Wind I feeder	33 KV	8	8.000	
16	33KV Win Wind II feeder	33 KV	4	4.000	
	(98MVA) Total		252	99.730	
II	SUNDANKURICHI 110/11 KV SS				
	1 x 10 MVA Pr.Tr	11kv	38	13.000	
1	Melaathakulam	11kv	51	5250KVA	
	feeder		Distn.Tr		
2	Western feeder II	11kv	18	4.500	
3	Western feeder I	11kv	16	5.500	
4	TNPL feeder	11kv	4	3.000	
	1 x 25 MVA Pr.Tr II		21	26.000	
5	TNPL feeder	33KV	9	11.000	
6	Suzlon feeder	33KV	12	15.000	
	1 x 25 MVA Pr.Tr III	33KV	26	28.500	
7	Suzlon feeder I	33KV	16	16.000	
8	Suzlon feeder II	33KV	10	12.500	
	1 x 25 MVA Pr.Tr IV		21	28.800	
9	Nanjan Feeder	33KV	11	13.750	
10	TNPL feeder - II	33KV	9	12.950	
	[illegible]		1	2.100	

Data received from TANTRANSCO officials during visit of [illegible] officials on 19.12.2011 & 20.12.201

	1 x 25 MVA Pr.Tr V		13	21.350			
11	Sundarakanchi feeder	33KV	7	8.750			
12	Vannikoneri cal	33KV	6	12.600			
	(110MVA) Total		119	117.650			
III	KEELAVEERANAM 110/11 KV SS						
	1 x 16 MVA Pr.Tr - I	11kv	91	21.875			
1	Brakes India I feeder	11kv	24	5.725			
2	Brakes India II feeder	11kv	23	5.550			
3	Brakes India III feeder	11kv	24	5.600			
4	Sri Ram	11kv	20	5.000			
	1 x 16 MVA Pr.Tr - II	11kv	56	17.300			
5	Sundaram Fasteners.	11kv	22	5.500			
6	Indo Wind	11kv	22	5.500			
7	Vestas	11kv	11	5.500			
8	Nettur Rural	11kv	1	0.800			
	1x25MVA Pr.Tr- VI	33kv	99	27.750			
15	Shriram EPC I Feeder	33kv	46	13.800			
16	Shriram EPC II Feeder	33kv	53	13.950			
	1x25MVA Pr.Tr- III	33kv	21	25,500			
9	33Kv Suzlon I Feeder	33kv	13	15.500			
10	33kv Suzlon III Feeder	33kv	8	10.000			
	1x25MVA Pr.Tr- IV		37	26.850			
11	33 KV Wind Farm feeder	33kv	25	11.850			
12	33KV Suzlon II Feeder	33kv	12	15.000			
	1x25MVA Pr.Tr- V	33kv	20	25.000			
13	33KV Suzlon IV Feeder	33kv	12	15.000			
14	33KV SRPL Feeder	33kv	8	10.000			
	(110MVA) Total		324	144.275			
IV	PERUNGUDI 110/33-11 KV SS						
	1 x 25 MVA Pr.Tr	11kv	138	33.950			
1	NEPC - I Feeder	11kv	22	5.550			
2	TNPL -	11kv	20	4.900			
3	TNPL - II	11kv	21	5.250			
4	ELGI	11kv	34	8.675			
5	VESTAS	11kv	19	4.500			
6	TVS	11kv	22	5.175			
	1x25 MVA Pr.Tr.II		86	28.790			
7	ABAN	11kv	33	12.890			
8	NEPC - II &Vestas II	11kv	27	9.950			
9	CUMI	11kv	26	5.950			
	1x16MVA Pr.Tr.III		80	23.000			
10	S V	11kv	20	5.000			
11	FAR EAST ASIA	11kv	29	7.400			
12	PALAYOOR	11kv	20	5.700			
13	Shanti feeder	11kv	11	4.900			

	1 x 10 MVA Pr.Tr IV	33kv	42	16.735			
13	33KV ABAN FEEDER	33kv	42	16.735			
	(76MVA) Total		346	102.455			
V	VADAKKANKULAM		110/33--11 KV SS				
	1 x 16 MVA Pr.Tr. I	11KV	75	21.915			
1	Kalkarai feeder	11KV	16	5.325			
2	Vadakkankulom	11KV	29	7.400			
3	C.I.feeder	11KV	21	5.090			
	Amaravally feeder	11Kv	9	4.100			
	1 x 25 MVA Pr.Tr. II	33KV	47	29.425			
4	Abar feeder I	33KV	33	12.975			
5	Mani	33KV	14	16.450			
	1x25MVA Pr.Tr.III	33KV	81	29.800			
6	MBDL I	33KV	23	15.700			
7	MBDL II	33KV	58	14.100			
	1x25 MVA Pr.Tr.IV	33KV	47	28.540			
8	NEC Micon feeder		20	16.550			
9	Aban II	33KV	27	11.990			
	1 x 25 MVA Pr.Tr. V	33KV	22	25.300			
10	JV feeder (Suzlon -I)	33KV	10	11.200			
11	Suzlon II feeder	33KV	12	14.100			
	(116MVA) Total		272	134.980			
VI	RADHAPURAM 110/11KV SS						
	1 x 16 MVA Pr.Tr. I	11KV	39	15.990			
1	Aban I Feeder	11KV	12	4.920			
2	Aban II Feeder	11KV	13	5.330			
3	Aban III Feeder	11kv	14	5.740			
	1 x 16 MVA Pr.Tr. II	11KV	42	18.900			
4	Aban IV Feeder	11KV	14	5.740			
5	Aban V Feeder	11KV	13	5.330			
6	Aban VI Feeder	11KV	13	5.330			
7	Radhapuram rural(dstn)	11KV	2	2.500			
	1x25MVA Pr.Tr.III	33KV	37	27.475			
8	Enercon I	33 Kv	24	11.225			
9	Suzlon Feeder I	33KV	13	16.250			
	1x25MVA Pr.Tr.IV	33KV	21	26.250			
10	Sorjan feeder		8	10.000			
11	Suzlon II		13	16.250			
	1x25 MVA Pr.Tr.V	33KV	21	25.600			
12	Ashok feeder	33KV	10	12.500			
13	Suzlon feeder.V	33KV	11	13.100			
	1x25 MVA PR.Tr.VI	33KV	20	25.000			
14	Suzlon feeder III (Parallel)	33KV	9	11.250			
15	Suzlon feeder IV Operation	33KV	11	13.750			
16	Water works feeder	11kv	0	0			
	(132MVA) Total		180	139.215			

VII	MUPPANDAL 110/11KV SS						
	1 x 25 MVA Pr.Tr. I	11KV	118	29,350			
1	Muthoot Feeder	11KV	21	4.925			
2	Mepco Feeder	11KV	10	2.500			
3	G B T C Feeder	11KV	6	1.400			
4	Texmo Feeder	11KV	17	4.400			
5	Lakshmi Feeder	11KV	17	4 025			
6	Jayajothi Feeder	11KV	28	7 600			
7	Kandanallur feeder	11 KV	19	4 500			
	1 x 25 MVA Pr.Tr. II	11KV	125	29.775			
8	S I V Feeder	11KV	23	5.300			
9	Wind Farm Feeder - I	11KV	20	5.125			
10	Wind Farm Feeder - II	11KV	20	4.050			
11	Ramco Feeder - I	11KV	20	5.275			
12	Ramco Feeder - II	11KV	23	5 475			
13	Gomathi Feeder	11KV	18	4.350			
	S S Day	440 V	1	0.200			
	(50MVA) Total		243	59.125			
VIII	ARALVAIMOZHI 110/11 KV SS						
	1 x 16 MVA Pr.Tr. I	Apex					
	1 x 16 MVA Pr.Tr. II	Andule					
	Total.		129	33.390			
1	Dalmia I Feeder	11KV	19	4 900			
2	Dalmia II Feeder	11KV	17	5.475			
3	Maris feeder	11KV	22	5.300			
4	Mill feeder	11KV	20	5.100			
5	Ponnian Feeder	11KV	24	5.965			
6	Aral Feeder	11KV	10	2.400			
7	Sakthi Feeder	11KV	17	4.250			
	1 X 16 MVA Pr.Tr. III	11KV	74	19.975			
8	Rajapalayam Feeder	11KV	24	6.000			
9	Fenner I Feeder	11KV	13	3.850			
10	Fenner II Feeder	11KV	14	4.475			
11	Dalmia III Feeder	11KV	23	5.660			
	(48MVA) Total		203	53.365			
IX	PALAVOOR 110/11KV SS						
	1 X 16 MVA Pr.Tr. I	11KV	87	22,900			
1	Pandian feeder	11KV	20	6.000			
2	Palcredit Feeder	11KV	13	4.075			
3	Apollo feeder	11KV	28	6.575			
4	Prakash Feeder	11KV	26	6 250			
	1 X 16 MVA Pr.Tr. II	11KV	64	17.380			
5	Dharani Feeder	11KV	25	6.250			
6	Kaleeswari Feeder	11KV	17	4.875			
7	Vestas Feeder	11KV	22	6.255			

	1 X 25 MVA Pr.Tr. III	11KV	74	24.9			
8	Enercon Feeder	11KV	10	6.000			
9	Vestas Feeder -II	11KV	12	6.150			
10	Premier I Feeder	11KV	22	6.000			
11	Premier II Feeder	11KV	30	6.750			
	1 X 25 MVA Pr.Tr. IV	11KV	95	26.325			
12	L M C Feeder	11KV	23	6.775			
13	Ennore Foundries	11KV	24	5.425			
14	Indo Wind Feeder	11KV	8	1.800			
15	SPS Feeder	11KV	13	6.250			
16	Narang Feeder	11KV	27	6.075			
	(82MVA) Total		320	91.505			
X	KARUNKULAM 110/11SS						
	1 X 16 MVA Pr.Tr. I	11KV	63	18.825			
1	TI Feeder II	11KV	26	6.500			
2	Wescare Feeder	11KV	26	6.125			
3	Suguna Feeder	11KV	11	6.200			
	1 X 16 MVA Pr.Tr. II	11KV	99	29.625			
4	Levenjipuram Feeder	11KV	15	4.225			
5	Moovi	11KV	7	5.000			
6	Maruthamalai	11KV	13	5.125			
7	T.I.Feeder III	11KV	25	6.250			
8	Best feeder I & II	11KV	39	9.025			
	1 X 16 MVA Pr.Tr. III	11KV	49	18.980			
9	Dalmia feeder	11KV	14	5.975			
10	Sri Ram Feeder	11KV	21	6.500			
11	PKPN Feeder	11KV	14	6.505			
	1 X 16 MVA Pr.Tr. IV	11KV	59	17.925			
12	TI Feeder I	11KV	19	5.525			
13	TI Feedor IV Feeder	11KV	21	5.675			
14	Asia Malch Feeder	11KV	19	6.725			
	1 X 25 MVA Pr.Tr. V	33 KV	50	26.550			
15	Vestas	33 KV	31	13,400			
16	Ayyanar feeder (Per)	33 KV	19	13 150			
	(89MVA) Total		320	111.905			
XI	ANNA NAGAR 110/33-11KV SS						
	1 X 16 MVA Pr.Tr. I	11KV	24	16.175			
1	Jayajothi feeder	11KV	7	5.250			
2	Wind Farm Feeder	11KV	7	5.300			
3	11 KV Enercon Feeder	11KV	10	5.625			
	1 X 16 MVA Pr.Tr. II	33KV	23	16.175			
4	33 KV Enercon I	33 KV	23	16.175			
	1x16MVA Pr.Tr.III		35	17.425			
5	33 KV Enercon II	33 KV	35	17.425			

	1x16MVA Pr.Tr.IV		37	17.000			
6	33 KV Monohar feeder	33 KV	37	17.000			
	(64MVA) Total		119	66.775			
XII	SANKANERI 230/110/33 kv ss						
	1 X 50 MVA Pr Tr -I	33 Kv	41	50.600			
1	Suzlon I feeder	33 Kv	13	15.600			
2	Suzlon II Feeder	33 Kv	13	16.250			
3	Suzlon III Feeder	33 Kv	9	11.250			
4	Suzlon IV feeder	33 Kv	6	7.500			
	1 X 50 MVA Pr Tr -II		47	53.450			
5	Suzlon V feeder	33 Kv	13	12.250			
6	Suzlon VI feeder	33 Kv	10	12.500			
7	Suzlon VII feeder	33 Kv	13	16.250			
8	Suzlon VIII feeder	33 Kv	11	12.450			
	1 X 50 MVA Pr Tr -III		52	52.500			
9	Suzlon IX feeder	33 Kv	6	9.100			
10	Suzlon X feeder	33 Kv	11	13.750			
11	Suzlon X1 feeder	33 Kv	12	15.000			
12	Pioneer feeder	33 Kv	21	14.650			
	(150MVA) Total		140	156.550			
XIII	Chidambarapuram 110/33-11 Kv SS						
	1x16 MVA Pr.Tr.1	11Kv	46	17.800			
1	11kv Enercon feeder	11Kv	13	6.125			
2	11Kv NEG Micon feeder	11Kv	12	5.900			
3	11Kv NEPC feeder	11Kv	23	5.775			
	1x25MVA Pr.Tr.II	33Kv	51	27.475			
4	33Kv Enercon feeder	33Kv	28	17.250			
5	33Kv Vestas feeder	33Kv	23	10.225			
	1x16MVA Pr.Tr.III	33Kv	70	17.300			
6	33Kv KKWF feeder	33Kv	31	8.225			
7	33Kv NEG Micon feeder	33Kv	39	9.075			
	1x16MVA Pr.Tr.IV		60	17.400			
8	33KV Vishall feeder	33Kv	60	17.400			
	(73MVA) Total		229	79.975			
XIV	Maharajapuram 110/33-11 KV SS						
	1 X 16 MVA Pr.Tr I	11KV	62	15.83			
1	Pioneer Feeder	11KV	15	4.290			
2	NEPC Feeder	11KV	26	6.365			
3	Vishall feeder	11KV	21	5.175			
	1 X 25 MVA Pr.Tr II	33KV	22	21.45			
4	Vestas Feeder	33KV	15	12.750			
5	Shriram feeder	33KV	7	8.700			
	1 X 25 MVA Pr.Tr III	33KV	30	28.400			
6	NEG Micon feeder	33KV	14	12.300			
7	Suzlon I Feeder	33KV	16	16.100			

	1 X 25 MVA Pr.Tr IV		26	27.000			
8	Suzlon III Feeder	33KV	13	14.550			
9	Suzlon II Feeder	33KV	13	12.450			
	(91MVA) Total		140	92.680			
	4 mics 5.000 MW load transferred from Sankaneri ss temporarily in Shriram feeder						
XV	Kanagamallur 110/11 KV SS						
	1 X 16 MVA Pr.Tr.I		74	18.275			
1	NEPC Feeder	11KV	25	6.500			
2	Annai Feeder	11KV	24	5.775			
3	Jayakrishna feeder	11KV	25	6.000			
	1 X 16 MVA Pr.Tr.II		74	17.975			
4	Indo Wind Feeder I	11KV	26	6.350			
5	Indo Wind Feeder II	11KV	22	5.950			
6	Vestas Feeder	11KV	24	5.675			
	(32MVA) Total		148	36.250			
XVI	Veeranam 230/33 KV SS	S					
	1 X 50 MVA Pr.Tr.I		49	51.750			
1	33 KV Micon III	33KV	16	17.100			
2	33 KV Micon IV	33KV	11	17.250			
3	33 KV Micon V	33KV	22	17.400			
	1 X 50 MVA Pr.Tr.II		54	52.375			
4	33 KV Ramco feeder	33KV	13	16.950			
5	33 KV Enercon	33KV	17	16.425			
	Alankulam 10(1)SS(Ty.tic up)		1	1.500			
6	Wind Farm feeder	33KV	23	17.500			
	1 X 50 MVA Pr.Tr.III		48	52.700			
7	33 KV Micon I	33KV	17	18.450			
8	33 KV Micon II	33KV	11	17.450			
9	33 KV Micon VI	33KV	20	16.800			
	1 X 50 MVA Pr.Tr.IV		42	50.025			
10	33 KV Micon VII	33KV	19	16.950			
11	33 KV Vestas I feeder	33KV	11	15.550			
12	33 KV Vestas II feeder	33KV	12	17.525			
	(200MVA) Total		193	206.850			
XVII	Irukkandural 110/33-11						
	1 X 16 MVA Pr.Tr.II	33KV	15	15.500			
1	33 KV Suzlon I Feeder	33KV	15	15.500			
	1 X 16 MVA Pr.Tr.III						
	33 KV Suzlon II Feeder						
	1 X 16 MVA Pr.Tr.IV	33KV	11	13.750			
2	33 KV Suzlon III Feeder	33KV	11	13.750			
	(48MVA) Total		26	29.250			
XVIII	Kodikurichi 110/33 KV SS						
	1 x 25 MVA Pr.Tr.I		48	29.200			
1	33 KV Poiga feeder	33KV	29	15.600			
2	33 KV Micon feeder	33KV	19	13.600			

	1 x 25 MVA Pr.Tr. II		**52**	**24.275**			
3	33 KV Vestas feeder	33KV	20	8.925			
4	33 KV S.V.Karai feeder	33KV	32	15.350			
	1 x 16 MVA Pr.Tr. III	11KV	**60**	**19.175**			
5	11 KV Wincon feeder	11KV	13	5.450			
6	11 KV Pioneer feeder	11KV	21	5.175			
7	11 KV Ayikudi feeder	11KV	21	5.550			
	temporary tie up(Tenkasi - Per)		5	3.000			
	1 x 25 MVA Pr.Tr. IV		**28**	**14.500**			
8	33 KV Leitner feeder	33KV	28	14.500			
	1 x 25 MVA Pr.Tr. V		**26**	**9.100**			
	33 KV Lucky Yarn feeder	33KV	26	9.100			
	(116MVA) Total		**214**	**96.250**			
XIX	**Udayathur 230 KV SS**						
	1 x 50 MVA Pr.Tr.I		**35**	**51.350**			
1	SIL I Feeder	33KV	10	14.100			
2	SIL II Feeder	33KV	11	16.250			
3	SIL III Feeder	33KV	10	15.000			
4	SIL IV Feeder	33KV	4	6.000			
	1 x 50 MVA Pr.Tr.II		**42**	**61.450**			
5	Sapthagiri Feeder	33KV	7	11.100			
6	SRL Feeder	33KV	11	14.350			
7	SRSPL Feeder	33KV	10	15.000			
	temporary tie up (3 * 1500) Koodankulam 10(1)		3	4.500			
8	Redphoenix feeder	33KV	11	16.500			
	1 x 50 MVA Pr.Tr.III		**34**	**49.850**			
9	SRF I Feeder	33KV	7	10.500			
10	SRF II Feeder	33KV	10	15.000			
11	SRF III Feeder	33KV	10	15.000			
12	SRF IV Feeder	33KV	7	9.350			
	1 x 50 MVA Pr.Tr.IV		**33**	**50.100**			
13	Simran I	33KV	10	15.000			
14	Simran II	33KV	11	16.500			
15	Simran III	33KV	10	15.600			
16	Simran IV	33KV	2	3.000			
	(200MVA) Total		**144**	**212.750**			
XX	**Thandaiyarkulam 110/33-11**						
	1 X 16 MVA Pr.Tr.I		**10**	**16.500**			
1	33 KV Micon I Feeder	33KV	10	16.500			
	1 X 16 MVA Pr.Tr.II		**11**	**18.150**			
2	33 KV Micon II Feeder	33KV	11	18.150			
	1 X 16 MVA Pr.Tr.III		**50**	**16.575**			
3	11KV SRSPL Feeder	11KV	15	5.650			
4	11KV SRSPL II Feeder	11KV	12	4.700			

	11KV Sundaravandam feeder						
5	& Bio-tech feeder	11 KV	23	6.225			
	1 X 25 MVA Pr Tr IV		90	35.600			
6	33 KV Wind Farm feeder I	33 KV	47	12.075			
7	33 KV Wind Farm feeder II	33 KV	43	23.525			
	1 X 25 MVA Pr.Tr.V		20	25.000			
8	33 KV Suzlon I Feeder	33 KV	12	15.000			
9	33 KV Suzlon II Feeder	33 KV	8	10.000			
	(98MVA) Total		181	111.825			
XXI	Ambikapuram 230/33 KV SS						
	1 X 50 MVA Power Tr - I		33	51.650			
1	Shubh feeder	33 KV	11	16.500			
2	Super Wind feeder	33 KV	11	16.900			
3	Simrat feeder	33 KV	11	16.250			
	1 X 50 MVA Power Tr - II		28	51.600			
4	SRPL WF Feeder	33 KV	11	16.500			
5	Suzlon Feeder	33 KV	8	16.800			
6	Kurukkalpatti	33 KV	9	18.300			
	1 X 50 MVA Power Tr - III		22	37.200			
7	Sayamalai feeder	33KV	3	6.300			
8	KN Nallur feeder	33KV	4	7.800			
9	Kilburn feeder	33KV	11	16.500			
10	CK Kulam feeder	33KV	4	8.600			
	1 X 50 MVA Power Tr - IV		16	33.600			
11	SEL I Feeder	33KV	7	14.700			
12	SEL II feeder	33KV	7	14.700			
13	Techno feeder	33KV	2	4.200			
	(200MVA) Total		99	174.050			
XXII	Rastha 110/33 KV SS						
	1 X 25 MVA Power Tr - I		15	24.300			
1	33 KV Suzlon feeder	33 KV	7	10.500			
2	33 KV Shubh feeder	33 KV	8	13.800			
	1 X 25 MVA Power Tr - II		16	25.200			
3	33 KV SRSPL feeder	33 KV	8	13.200			
4	33 KV Madhavakurichi fr	33 KV	9	12.000			
	1 X 25 MVA Power Tr - III		16	24.000			
5	33 KV SISL	33 KV	9	13.500			
6	33KV Mavadi feeder	33 KV	7	10.500			
	1 X 25 MVA Power Tr - IV		6	12.000			
7	33 KV Thalaiyuthu feeder	33 KV	6	12.000			
	(100MVA) Total		53	85.500			

DETAILS OF TOTAL CONNECTED WEGs LOAD IN TIRUNEL VELI DIVISION						
Total No. of WEGS (Board & Private) Connected as on 31.10.11 at Wind Farm SS only						
	4265	2402.910				
	0	0.000				
			Pvt		Board	
TOTAL No. of WEGS			M/cs	MW	M/cs	MW
(Board & Private)	4265	2402.910	4166	2387.790	99	15.120
in Tirunelveli Division		Total Pvt WEGs		2387.775		
			Solar	0.015		

MONTHLY RETURN OF FEEDER WISE LOAD & PEAK IN THE MONTH OF OCT (10/2011)

Sl No	Pr.TR Capacity	Name of the feeder	33/22/11	No Of Wegs	Capacity MW	Remarks
		110/ 22 KV DUDIMANGALAM SUB-STATION				
1	Pr Tr-I 25 MVA	Annamalai	22 KV	20	7 335	
2		Dorex	22 KV	6	3 500	
3		Chekinad	22 KV	23	5 650	
4		Ashok leyland	22 KV	27	11.325	
5	Pr Tr-II 16 MVA	Todem	22 KV	27	9.775	
6		Century	22 KV	32	9 000	
7	Pr Tr-III 16 MVA	Prasad	22 KV	19	7.225	
8		Wind power	22 KV	31	9.605	
9	Pr.Tr.-IV 16 MVA	Jeelstex	22 KV	28	8 475	
10		Indiawood	22 KV	40	10.280	
11	Pr Tr V 16 MVA	SWL	22 KV	21	7 320	
12		GWL	22 KV	30	8 650	
	89 MVA	TOTAL		312	99.045	
		110/22 KV PONNAPURAM SUB-STATION				
1	Pr.Tr-I 25 MVA	Ganeshwar	22 KV	14	5 850	
2		Sarjan	22 KV	8	10 000	
3		Sri sangara	22 KV	15	10.200	
4	Pr Tr.-II 25 MVA	SPPL	22 KV	5	6 250	
5		Sudhan	22 KV	12	9 000	
6		DCW	22 KV	35	11 200	
7	Pr Tr.-III 25 MVA	Regini	22 KV	25	10.375	
8		Ushdew	22 KV	22	7 740	
9		Jagatnguru	22 KV	45	12 830	
10	Pr Tr.-V 16 MVA	Vinayaga	22 KV	44	10 425	
11		Ambika	22 KV	13	8 400	
12	Pr.Tr.-IV 16 MVA	KM Kaitwear	22 KV	21	6 250	
13		Fokker	22 KV	27	10 250	
	Total		22 KV	290	118.770	
14	Pr Tr VI 25 MVA	Suzlon	33 KV	17	12 800	
15		Madalhupalayam	33 KV	17	12 150	
	Total			34	24 950	
	132 MVA	TOTAL		324	143.720	
TR I V II Parellel						
		110/22 KV THUNGAVI SUB-STATION				
1	Pr Tr-I 16 MVA	Paralhampati	22 KV	34	9 125	
2		R.G Pudur	22 KV	23	7 325	
3	Pr Tr-II 25 MVA	Rajaguru	22 KV	44	9 900	
4		Ashok Leyland	22 KV	40	9 000	
5		Cochin	22 KV	32	7 200	
6	Pr Tr-III 25 MVA	Metrichy	22 KV	40	10 800	
7		Neg Micon II	22 KV	6	9 900	
8		Neg Micon I	22 KV	24	9 975	
9	Pr Tr.-IV 25 MVA	Pioneer	22 KV	33	8 855	
10		Ilchipatti	22 KV	22	10 555	
11	Pr Tr-V 25 MVA	Vadha	22 KV	33	10 830	
12		Velayuthasamy	22 KV	13	9 750	
13		Prabhu	22 KV	14	9 975	
	116MVA	TOTAL		352	123.275	

Sl No	Pr Tr & Capacity	Name of the feeder	33/22 -11	No. of Wegs	Capacity MW
		110/22 KV KONGALNAGARAM SUB-STATION			
1	Pr.Tr-I 25 MVA	Visagalpatti	22 KV	5	9.900
2		Ramco	22KV	6	9.900
3		CVG	22 KV	8	8.700
4	Pr.Tr-II 25 MVA	Kongalnagaram	22 KV	3	2.250
5		Ravanapuram	22 KV	12	9.000
6		Micon	22 KV	12	10.100
7	Pr.Tr-III 25 MVA	Pernaikinaru	22 KV	13	9.750
8		M Fattinam	22 KV	13	9.750
9		Gomangalam	22 KV	13	9.750
10	Pr.Tr-IV 25 MVA	Adivolli	22 KV	13	9.750
11		Vishnu	22 KV	15	11.250
12		Pudhupalayam	22 KV	Distribution #	
13	Pr Tr-V 25 MVA	Vestas I	22 KV	6	9.900
14		Vestas II	22 KV	6	9.900
15		Vestas III	22 KV	8	8.000
16	Pr.Tr-VI 25 MVA	Maruthi 1	33 KV	18	15.300
17		Maruthi 2	33 KV	11	9.350
	150 MVA	TOTAL		163	150.550
		110/22 KV ANDHIYUR SUB-STATION			
1	Pr.Tr I 25 MVA	Micon	22 KV	5	8.250
2		Best-I	22 KV	6	10.000
3		Best-II	22 KV	6	10.000
4	Pr.Tr-II 25 MVA	NSL	22 KV	6	9.900
5		Doller Apparels	22 KV	10	8.400
6		Hindustan	22 KV	8	6.800
7	Pr.Tr-III 25 MVA	Balu Fabrics	22 KV	10	10.200
8		Gomangalam	22 KV	6	9.900
9	Pr Tr.-IV 25 MVA	Narasimma	22 KV	6	9.900
10		Sakthi	22 KV	6	9.900
11		LMW	22 KV	6	9.900
	100 MVA	TOTAL		79	103.250
		110/33-11 KV SULTHANPET SUB-STATION			
1	Pr.Tr-IV 16 MVA	Chemplast	11 KV	35	9.450
2		TPL	11 KV	16	4.000
3		Bogampatti	11 KV	21	6.800
4		SA Palayam	11 KV	0	0.000
5	Pr Tr.-V 16 MVA	Perandampalayam	11 KV	30	7.200
6		Thalakarai	11 KV	0	0.000
7		CPM	11 KV	21	5.475
8		Mill	11 KV	10	2.500
		Arasi	11 KV	15	5.250
9				1	0.600
		Total 11 KV		148	39.675
10	Pr Tr I 25 MVA	Sulthanpet	33 KV	9	2.075
11		TPL	33 KV	67	16.375
12	Pr Tr-II 25 MVA	SRPL	33 KV	14	14.900
13		Eastman	33 KV	28	13.225

14	Pr Tr. III 25 MVA	Agra sug	33 KV	29	13 225	
15		Vedavalli	33 KV	12	15.000	
		Total 33 KV		149	74 300	
	107 MVA	Total 33 KV+11 KV		297	114 475	
note: - Tind feeder						
Sl. No	Pr Tr & Capacity	Name of the feeder	33/22 -11	No of Wags	Capacity MW	
110/33-11 KV EDAYARPALAYAM SUB-STATION						
1	Pr Tr -III 25 MVA	Shanthi	33 KV	19	15 450	
2		Panapatty	33 KV	19	15.300	
3	Pr. Tr -IV 25 MVA	Aara	33 KV	30	10.500	
4		Velathal	33 KV	21	15 650	
		Total 33 KV		89	56 900	
5	Pr.Tr.-I 16 MVA	Dhoran	11 KV	18	5.375	
6		Texinn	11 KV	24	6.700	
7		Fairgeal	11 KV	19	5.330	
8		Sri Murugan	11 KV	24	5 645	
9	Pr Tr -II 16 MVA	Pioneer	11 KV	20	6.330	
10		Shoola Clinic	11 KV	19	4.750	
11		Sri Chakra	11 KV	15	5.055	
12		Peedampalli	11 KV	27	10.270	
Total 82 MVA		Total 11 KV		136	39 185	
		Total 33 KV+11 KV		225	96 085	
110/33-11 KV KEYHANUR SUB-STATION						
1	Pr.Tr -IV 25 MVA	Chora	33KV	25	12 175	
2		NEPC	33 KV	57	27 850	
3	Pr Tr-V 25 MVA	RRB	33 KV	32	17 325	
4		Vestas	33 KV	22	11 525	
50 MVA		TOTAL 33 KV		136	62.875	
4	Pr Tr -I 16 MVA	TNEB	11 KV	23	5.725	
5		Hanuman	11 KV	3	1.075	
6		Pricol	11 KV	20	7 190	
7		Prima	11 KV	22	6 150	
8	Pr.Tr.-II 16 MVA	LMW	11 KV	30	8 200	
9		Textool	11 KV	22	5 325	
10		Kanishk	11 KV	24	5.975	
11		Sangeedh	11 KV	20	5 900	
12	Pr.Tr-III 16 MVA	SAS	11 KV	26	7.360	
13		LNGS	11 KV	22	5.400	
14		Pioneer Winnon	11 KV	13	3 225	
48MVA		TOTAL		233	61 525	
98MVA		Total 33 KV + 11 KV		369	124 400	
110/33 KV ELEVANTHI SUB-STATION						
1	Pr Tr -I 16 MVA	Textool	33 KV	45	12 500	
2		Classic	33 KV	11	3 950	
3		Kallipalayam	33 KV	26	14 900	
4		Pawan Sakthi	33 KV	22	12 950	
5	Pr Tr -IV 25 MVA	Simran	33KV	10	14 300	
6		Suzlon	33 KV	24	12 900	
7	Pr.Tr -VI 25 MVA	Kullampalayam	33 KV	11	9 250	
8		Vadamalai palayam	33 KV	18	15 350	
86 MVA		TOTAL 33 KV		173	93 950	
1		Kizhavan	11 KV	Dist	4 150	

3	Pr Tr -III 10 MVA	T.T.Palayam	11 KV	3	1.300
				Dist	4.462
3		Kottapalayam	11 KV	12	5 195
				Dist	7 530
		Pavanini	11 KV	9	3 525
4				Dist	2.604
5	Pr.Tr.-V 10 MVA	C.W.F.I	11 KV	17	4 550
6		Pioneer Asia	11 KV	16	5 175
45 MVA		Total 11 KV		57	20.840
111 MVA		Total 33 + 11 KV		230	114 790
Sl. No	Pr Tr. & Capacity	Name of the feeder	33/22 -11	No of Wags	Capacity MW

110/22 KV CHINNAPUTHUR SUB-STATION

1	Pr Tr. I 25 MVA	Enercon-2	22 KV	13	10 400
2		Enercon-7	22 KV	13	10.400
3	Pr Tr -II 25 MVA	Enercon-3	22 KV	13	10.400
4		Sarjan	22 KV	10	11 200
5		Enercon-8	22 KV	10	8 000
6	Pr.Tr -III 25 MVA	Govindhapuram	22 KV	6	9 350
7		Enercon-1	22 KV	13	10 400
8		Enercon-6	22 KV	13	10 400
9	Pr Tr -IV 25 MVA	Enercon-4	22 KV	14	10 250
10		Enercon-5	22 KV	14	10.750
11	Pr Tr.-V 25 MVA	Enercon-10	22 KV	12	9 600
12		Enercon-9	22 KV	12	9 600
13		Enercon-11	22 KV	9	7 200
14	Pr.Tr.-VI 25 MVA	Enercon-12	22 KV	10	8.000
15		Enercon-13	22 KV	19	10 500
		Enercon-14	22 KV	10	8.000
150MVA		Total		193	104.440

110/22 Kv MARUTHUR SUB STATION

Sl No	Pr Tr & Capacity	Name of the feeder	33/22 -11	No. of Wags	Capacity MW
1	Pr Tr -I 16 MVA	Ponnapuram	22 KV	37	9 530
2		Sakthi	22 KV	33	8 200
3	Pr.Tr.-II 16 MVA	Padmini	22 KV	37	8 075
4		Maries	22 KV	32	9.300
5	Pr.Tr.-III 16 MVA	Gold Line	22 KV	43	10.085
6		Enercon	22 KV	36	10.970
7		Wincor	22 KV	41	10 125
8		Maruthur	22 KV		
9	Pr Tr -IV 25 MVA	Dhanyalakshmi	22 KV	36	8 525
10		Karvembu	22 KV	15	7 750
		Suzlon I	22 KV	27	10 600
89 MVA		TOTAL		335	93.060

110/22 Kv MELKARAIPATTI SUB STATION

	Pr Tr I-25 MVA	Keerapur	22 KV	13	10.400
1		Enercon-1	22 KV	10	8 000
2		Enercon 6	22 KV	12	9 600
3		Enercon-3	22 KV	13	10 400
4		Enercon-2	22 KV	10	8.000
5		Enercon-9	22 KV	12	9 600
6	Pr Tr -II 25 MVA	Enercon-4	22 KV	12	9 600

[illegible]		[illegible]	[illegible]	[illegible]	[illegible]	
8	Pr.Tr.-IV 25 MVA	Energon-13	22 KV	9	7.200	
9		Energon-11	22 KV	12	9.600	
10		Energon-10	22 KV	13	10.400	
11	Pr.Tr.-V 25 MVA	Energon-12	22 KV	6	4.800	
12		Energon-5	22 KV	13	10.400	
13		Energon-7	22 KV	13	10.400	
	125 MVA					
		TOTAL		161	128 900	

110/33 Kv MUTHUNAICKENPATTI SUB STATION

1	Pr.Tr.-I 25 MVA	Rajampatti	33 KV	20	12 000	
2		SISL	33 kV	22	13 200	
	Pr.Tr.-II 25 MVA	Pr.Tr Commissioned on 18.03.11 Feeder not yet connected				
	25 MVA	TOTAL		42	25 200	

110/33 KV PANAPATTY SUB STATION

1	Pr Tr I-25 MVA	DLF -I	33 KV	9	13 250	
2		DLF -II	33 KV	8	10 750	
3	Pr Tr II- 25 MVA	DLF -III	33 Kv	6	8.500	
4		DLF -IV	33 Kv	11	14.500	
5	Pr Tr. III- 25 MVA	Methubavi	33 Kv	8	11 500	
6		Periya kalanthai	33 Kv	9	11 100	
	75 MVA	TOTAL		51	69 600	

230/33 KV Sadayapalayam Substation

1	Pr Tr I -50MVA	T.N.Durai #	33 KV	4	5.500
2		Navanari #	33 KV	9	13 500
3		Mandorpalayam	33 KV	10	14 750
4		Eragam-patti	33 KV	10	15 000
5	Pr.Tr.II - 50 MVA	Green Land	33 KV	9	12 250
6		Ronit	33 KV	9	13 000
7		Simran	33 KV	10	15 000
8		Nandvanam palayam	33 KV	5	6 750
	100 MVA	TOTAL		66	95 750

MONTHLY RETURNS OF WIND FARM / DISTRIBUTION & 10(1) SUB-STATION WISE WEGs CONNECTED IN UDUMALPET AREA DURING THIS MONTH OF OCT (10/2011) Palagat Pass

Sl.N	Name of the Sub-Station	110/33/ 22-11 KV	No.Of.Pr.Tr.Available 8	10	16	25	50	Total Cty	Board WEGs No.of WEG	MW	No.of WEG	Capacity in MW
1	Gudimangalam	110/22			4	1		89			[illegible]	[illegible]
2	Pennapuram	110/22			2	3		107			290	115.770
	Pennapuram	110/33				1		25			34	24.900
3	Thungavi	110/22			1	4		115			362	121.270
4	Kongalnagaram	110/22				5		125			153	150.550
	Kongalnagaram	110/33				1		25				
5	Amaiyur	110/22				4		100			79	103.250
6	Kethanur	110/33				2		50			359	124.400
	Kethanur	110/11			3			48	8	2.000		
7	Sulthanpet	110/33				3		75	1 x .90 MW Dismantling		297	114.475
	Sulthanpet	110/11			7			37				
8	Edayapalayam	110/33				2		50			228	95.085
	Edayapalayam	110/11			2			32				
9	Elavanthy	110/33			1	2		66			230	114.790
	Elavanthy	110/11		2		1		45				
10	Chinnaputhur	110/22				6		150			192	154.440
	Melkarapatti	110/22				5		125			161	126.800
12	Marutur	110/22			4	1		69			336	90.960
13	M.N.Patty	110/33				2		50			42	25.200
14	Paropatty	110/22				3		75			51	69.600
15	Sadayapalayam	230/33					2	100			77	102.750
	TOTAL WIND FARM SS		0	2	19	46	2	1574	8	2	3223	1651.335
	DISTRIBUTION SUB-STATION											
1	Kinathukadavu	110/22			2			32			34	19.600
2	Pollachi	110/22			3			48			309	82.290
3	Udumalpet	110/22				2		50			114	66.870
4	Somanur	110/33				2		50			0	0.000
	Somanur	110/11			1	1		41			0	0.000
5	Palladam	110/11			2			32			99	30.225
6	Peedampalli	110/22			2			32			27	10.270
7	Pongalur	110/33		1	1			26			34	24.000
	Pongalur	110/11			2			32			0	0.000
8	Poolankinar	110/22			2	1		57			71	66.150
9	Karadivavi	110/33				1		25			62	30.750
10	Karadivavi	110/11			2			32			32	13.475
	Negamam	110/22				2		50			40	47.175
	Negamam	110/33				1		25			13	
11	Dharapuram	110/22			2			32			53	34.950
12	Palappampatti	110/22				2		50			65	33.100
13	Thirumazhisai	110/22			1			16			1	0.225
14	Thalayoothu	110/22			2	1		57			69	62.600
15	Kundadam	110/22			3			48			54	57.250
16	Madathukulam	110/22			2			32			39	29.700
17	Kathelampatty	110/22			1			16			3	2.500
18	Vagarai	110/22			1			16			7	2.000
19	Kotulhupalayam	110/22			2			32			10	16.000
20	Mulanur	110/33		2				20			8	6.800
21	Angalakurichi	110/22			2			32			4	3.400
	Total Distn.SS		0	3	33	13	0	883	0	0	1177	642.830
1	Rasipalayam	110/33				4		100			93	79.050
2	Pethapampatti	110/33				2		50			47	39.950
3	Anikadavu	230/33					3	150			99	148.500
	Total 10(1) SS		0	0	0	6	3	300	0	0	239	267.500

MONTHLY RETURNS OF DISTRIBUTION & 10 (I) SUB-STATION WISE WEGs CONNECTED IN UDUMALPET AREA DURING THIS MONTH OF OCT (10/2011) Kambam Pass

	DISTRIBUTION SUB-STATION											
Sl.N	Name of the	110/33/	No.Of.Pr.Tr.Available					Total	Board WEGs		No.of	Capacity
	Sub-Station	22-11 KV	8	10	16	25	50	Qty	No.of WEG	MW	WEG	in MW
1	Kandamanur	110/22				3		75			47	75.250
2	Kamachipuram	110/22		2		2		70			47	69.300
3	Andipatti	110/22		2		2		70			42	69.300
4	Theni	110/22			1	1		41			14	21.000
5	Kadamalaikundu	110/22		2				20			24	20.400
6	Rasingapuram	110/22		2				20			7	4.200
7	Vaigai	110/22			1			16			6	9.000
8	Markayankottai	110/22		1				10			10	9.000
9	Uthamapalayam	110/22			2			32			17	10.200
	Total Dist SS		0	9	4	8	0	354	0	0	215	208.250
	10(1) SUB-STATION											
1	Regen SS of Kandomanur	110/33				2		50			34	51.000
2	Gamesa SS of Kadamalaikundu	110/33				1		25			29	24.650
3	Sri Rangapuram SS of Gamesa	110/33				2		50			33	45.050
4	Regen SS of Kamachipuram	110/33				2		50			34	51.000
	Total 10(1) SS		0	0	0	7	0	175	0	0	150	171.700

Distribution Substations details wrt Tirunelveli as on 30.10.2011

Sl. No.	Name of SS	110/33/22-11 KV	No. of Pr. Tr. available 5	8	10	16	25	Total Qty.	No. of WEGs	Capacity MW
1	Kayathar SS *	66-11 KV SS			1			10	35	11.680
2	Kottaikarungulam SS	110/33-11 KV SS				3	1	73	104	68.115
3	Panagudi SS	110-11 KV SS				3		46	96	47.875
4	Vannikonenthal	110-11 KV SS			1			10	42	12.545
5	SPIC 230 KV SS								20	1.100
6	Koodankulam ss	110/33-11 KV SS					3	91	85	94.250
	Temp tie up (Koodankulam 10(1)								2	3.000
7	Kottaram SS	110-11 KV SS				1		16	15	7.450
8	Pavoorchathiram SS	110/33-11 KV SS			1		3	75	140	89.000
9	Mandapam SS	110-11 KV SS			1			10	4	0.900
10	Rameshwaram SS	110-11 KV SS		2				16	2	0.500
11	Tenkasi SS	110-11 KV SS			2			20	36	17.400
12	Shencottah SS	110-11 KV SS			1			10	29	10.825
13	Uthumalai SS	110/33-11 KV SS				1	3	91	85	94.550
14	Shenbagaramanpudur SS	110-11 KV SS			1			10	9	2.250
15	Surandai SS	110/33-11 KV SS			1		1	35	82	51.250
16	Kadayanallur SS	110-11 KV SS			2			20	54	24.975
17	Gangaikondan SS	110-33 KV SS			1			10	12	10.905
18	Veerasigamani	110/33-11 KV SS				1	3	91	247	102.725
	Temp tie up (Surandai 10(1)(Per))								1	0.600
19	Puliangudi SS	110/11 KV SS			2			20	35	8.750
20	Valliyoor SS	110/11 KV SS			1			10	12	6.300
21	Alankulam SS	110/33-11 KV SS			2		3	95	165	93.950
22	Chettikurichi 66/33-11 KV SS	66/11 KV SS	1					5	3	4.400
23	Manur 110/11 KV SS	110/33-11 KV SS			1		2	60	77	61.600
24	Thalayuthu 110/33-11KV SS	110/33 KV SS					1	25	14	10.500
25	Malayankulam	110/11 KV SS			1			10	11	9.350

26	Vadakkalai	110/11 KV SS			1	10	40	16 850
27	Kadayam SS	110/11 KV SS		1		10	5	1 125
28	Kazhugumalai SS	110/11 KV SS		1		10	55	50 150
29	O Thulukkapatti SS	110/11 KV SS		1		10	16	9 600
30	Sivagnanapuram SS	66/11 KV SS	1			5	2	4 000
31	Therkupatti (Section 10(1))	110/33 11 KV SS			3	75	174	99.200
32	Kazhugumalai SS(Section 10(1)	110/33 KV SS					9	7.200
33	Samugarengapuram 10(1)						7	10.500

REVISED LOAD FLOW LIST (FUTURE PROJECTS)

Sl. No.	Company name	Name of SS	Capacity	scheme	Nearest SS
1	M/s Regen Power Tech	Govindapuram	4x50 MVA, 230/33 KV	10(1)	Kayathar 400 KV SS
2	M/sSri Maruthi Wind Park Developers	Vagarai	2x25 MVA, 110/33 KV	10(1)	Proposed Vagarai 400 KV SS
3		Kulathupalayam	2x25 MVA 110/33 KV	10(1)	Proposed Vagarai 400 KV SS
4	M/s Kairali Wind Farm services (P) Ltd	Antipatti	4x25 MVA 110/33 KV	10(1)	Thappagundu 400 KV SS
5		Thennampatti	4x50MVA, 230/33 KV	10(1)	Proposed Thennampatti 400 KV SS
6		Sankaraperi	4x50MVA, 230/33 KV	10(1)	Proposed Thennampatti 400 KV SS
7	M/s Global wind Power Ltd	Moolanur	2x25 MVA 110/33 KV	10(1)	Proposed Rasipalayam 400 KV SS
8		Gangaikondan	2x25 MVA 110/33 KV	10(1)	Kanarpattii 400 KV SS
9		Kottaikarungulam	2x25 MVA 110/33 KV	10(1)	Newly to be proposed 400 KV SS
10		Keelaveeranam	1x25 MVA 110/33 KV	10(1)	Kanarpattii 400 KV SS
11	M/s Suzlon Energy Ltd	Kulathupalayam	2x25 MVA, 110/33 KV	10(1)	Proposed Vagarai 400 KV SS
12		Vagarai	2x50 MVA, 230/33 KV	10(1)	Proposed Vagarai 400 KV SS
13		Tennampatti	4x50 MVA, 230/33 KV	10(1)	Kayathar 400 KV SS
14		Venkateswarapuram	4x50MVA 230/33 KV	10(1)	Kayathar 400 KV SS
15		Kumarapuram	4x50MVA, 230/33 KV	10(1)	Kayathar 400 KV SS
16	M/s Winwind Power energy pvt.Ltd	Muthugaoundanur	2x25 MVA, 110 /33	10(1)	Anikadavu 400 KV SS
17		Nallampalayam	2x25 MVA, 110 /33	10(1)	Anikadavu 400 KV SS
18		kottaikarungaulam	2x25 MVA 110/33 KV	10(1)	Newly to be proposed 400 KV SS

.....2

10800
3050

19		Thiruvannamalai	1x25 MVA, 110/33 KV	10(1)	Thiruvannamalai 230 KV SS
20	M/s Gamesa Wind Turbine (P) ltd	Anthur	4x25MVA, 110/33 KV	10(1)	Devakottai 230 KV SS
21		Elayanuthur	4x25 MVA, 110/33 KV	10(1)	Anikadavu 400 KV SS
22	M/s South West Wind Farm Pvt Ltd	Malayankulam	2x25MVA, 110/33 KV	10(1)	Kanarpatti 400 KV SS
23	M/s Suzlon Energy Ltd	Panappatti	1x25 MVA 110/33 KV	IDC	Panappatti 110 KV SS
24	M/s TVH Energy	Moolanur	4x25MVA, 110/33KV	10(1)	Proposed Vagarai 400 KV SS
25	M/s.Winwind Power Energy Pvt.Ltd.	Vannikonendal	2x25 MVA, 110/33	10(1)	Kanarpattai 400 KV SS
26	M/s Regen Power Tech	Kilan Kondal	2x100 MVA, 230/33 KV	10(1)	Proposed Vagarai 400 KV SS
27	M/s RRB Energy Ltd	Vadakarai	4x25 MVA, 110/33 KV	10(1)	Vadakarai 110 KV SS
28	M/s RRB Energy Ltd	Vannikonendal	2x25 MVA, 110/33 KV	10(1)	Kanarpattu 400 KV SS
29	M/s TVH Energy	Kandamanur	1x10 MVA to 1x25 MVA 110/22KV	IDC	Kandamanur 110 KV SS
30	M/s Hari Wind Farm	Kulathupalayam	2x25MVA, 110/33KV	10(1)	Proposed Vagarai 400 KV SS
31	M/s Vestas Wind Tech, India (P) Ltd	Kottaikarungulam	2x50 MVA, 110/33 KV	10(1)	Newly to be proposed 400 KV SS
32		Kadambur	4x50 MVA, 230/33 KV	10(1)	Newly to be proposed 400 KV SS
33	M/s Cape Infrastructure Pvt.Ltd	Sapthur	4x25 MVA, 110/33 KV	10(1)	Thappagundu 400 KV SS
34		Elumalai	4x25 MVA, 110/33 KV	10(1)	Thappagundu 400 KV SS
35		Koodankulam	4x25 MVA, 110/33 KV	10(1)	Newly to be proposed 400 KV SS
36		Poonivadi	4x25 MVA, 110/33 KV	10(1)	Proposed Rasipalayam 400 KV SS
37		Gangaikondon	1x25 MVA, 110/33 KV	IDC	Gangaikondon 110 KV SS
38	M/s.Leitner Sarum Mfg. Ltd	Alangulam	1x25 MVA, 110/33 KV	10(1)	Kanarpattii 400 KV SS
39		Navaladi	2x25 MVA, 110/33 KV	10(1)	Kayathar 400 KV SS
40		Irukkandurai	1x25 MVA, 110/33 KV	IDC	Irukkandurai 110 KV SS
41		Iyyanarchi	1x25 MVA, 110/33 KV	10(1)	Kanarpattii 400 KV SS

.....3

42	M/s Gamesa Wind Turbine (P) ltd	Sadkarandam Palayam	4x25 MVA, 110/33 KV	10(1)	Proposed Rasipalayam 400 KV SS
43	M/s.Enercon (India) Ltd.	Puliyangudi	Addl 1x25 MVA, 110/33 KV	IDC	Puliangudi 110 KV SS
44		Kadayam	1x25 MVA 110/33 KV	IDC	Kadayam 110 KV SS
45	M/s Gamesa Wind Turbine (P) Ltd	Periyakannanpalayam	4x25 MVA, 110/33 KV	10(1)	Proposed Rasipalayam 400 KV SS
46	M/s.Enercon (India) Infrastructure Pvt.Ltd	Chellampalayam	1x25 MVA 110/22 KV	10(1)	Proposed Vagarai 400 KV SS
47	M/s.Sri Maruthi Infrastructure Developers	Kannanallur	4x50 MVA 230/33 KV	10(1)	Newly to be proposed 400 KV SS
48		Mullaikaraipatti	4x50 MVA 230/33 KV	10(1)	Newly to be proposed 400 KV SS
49	M/s Sri Maruthi Wind Park Developers	Ittamozhi	4x50 MVA 230/33 KV	10(1)	Newly to be proposed 400 KV SS
50		Pidaneri	4x50 MVA 230/33 KV	10(1)	Newly to be proposed 400 KV SS
51	M/s.Suzlon Energy Ltd	Samugarenga puram	2x25 MVA 110/33 KV	10(1)	Newly to be proposed 400 KV SS
52	M/s. Regen Power Tech	Paruthiyar	2x100 MVA 230/33 KV	10(1)	Proposed Vagarai 400 KV SS
53	M/s.Cape Infrastructure Pvt.Ltd.,	Kurukalpatti	2x50 MVA 230/33 KV	10(1)	Kanarpatti 400 KV SS
54	M/s.RRB Energy Ltd.	Surandai	1x25 MVA 110/33 KV	10(1)	Kanarpatti 400 KV SS
55	M/s.RRB Energy Ltd.	Veerasigamani	1x25 MVA 110/33 KV	10(1)	Kanarpatti 400 KV SS
56	M/s.RRB Energy Ltd.	Poolavadi	1x25 MVA 110/33 KV	10(1)	Anikadavu 400 KV SS
57	M/s.RRB Energy Ltd.	Karadivavi	1X25 MVA 110/33 KV	10(1)	Anikadavu 400 KV SS
58	M/s. Winwind Power Energy Pvt Ltd.,	Sirukinar	4x25 MVA 110/33 KV	10(1)	Proposed Rasipalayam 400 KV SS
59	M/s. Winwind Power Energy Pvt.Ltd.,	Thandayarkulam	1x25 MVA 110/33 KV	IDC	Thandayarkulam 110 KV
60	M/s.Wind Force Mangement Services Pvt.Ltd	Kadambur	4x25 MVA 110/33 KV	10(1)	Newly to be proposed 400 KV SS
61	M/s.Caparo Energy (India) Ltd	M.S.Puram/ Kangeyam	4x50 MVA 230/33 KV	10(1)	Proposed Rasipalayam 400 KV SS
62	M/s.Caparo Energy (India) Ltd	K.G.Pudur/ Kangeyam	4x50 MVA 230/33 KV	10(1)	Proposed Rasipalayam 400 KV SS

..... 4

63	M/s. Caparo Energy (India) Ltd	Idaiseval	4x50 MVA 230/33 KV	10(1)	Newly to be proposed 400 KV SS
64	[illegible] Energy Ltd	Muthampatayam	4x50 MVA 230/33 KV	10(1)	Proposed Vagarai 400 KV SS
65	M/s.Winwind Power Energy Pvt. Ltd	Appayampatti	4x25 MVA 110/33 KV	10(1)	Proposed Vagarai 400 KV SS
66	M/s Winwind Power Energy Pvt. Ltd	Kilankundal	4x25 MVA 110/33 KV	10(1)	Proposed Vagarai 400 KV SS
67	M/s Gamesa Wind Turbines Pvt.Ltd.,	Thirumalpuram	5x50 MVA 230/33 KV	10(1)	Proposed Thennampatti 400 KV SS
68	M/s.Gamesa Wind Turbines Pvt Ltd.,	Rasingapuram	4x25 MVA 110/33 KV	10(1)	Thappagundu 400 KV SS
69	M/s.KSK Wind Energy Pvt.Ltd.	Rajapudukudi	4x50 MVA 230/33 KV	10(1)	Kayathar 400 KV SS
70	M/s.KSK Wind Energy Pvt.Ltd.	Sedapatti	2x50 MVA 110/33 KV	10(1)	Thappagundu 400 KV SS
71	M/s.KSK Wind Energy Pvt.Ltd.	Elayamuthur	2x50 MVA 110/33 KV	10(1)	Anikadavu 400 KV SS
72	M/s.Harit Vidyut Pvt.Ltd	Rajapudukudi SS	4x25 MVA 110/33 KV	10(1)	Kayathar 400 KV SS
73	M/s.Trishe Developers Pvt.Ltd	Pasuvanthanai SS	4x50 MVA 230/33 KV	10(1)	Proposed Thennampatti 400 KV SS
74		Ottapidaram SS	4x50 MVA 230/33 KV	10(1)	Proposed Thennampatti 400 KV SS
75		Denkanikottai SS	4x25 MVA 230/33 KV	10(1)	Hosur 230 KV SS
76		Belur SS	4x25 MVA 110/33 KV	10(1)	Hosur 230 KV SS
77	M/s.Suzlon Energy Ltd	Vagarai SS	2x50 MVA 230/33 KV	10(1)	Proposed Vagarai 400 KV SS
78	Leitner Shriram Manufacturing Ltd	Pudur SS	4x25 MVA 110/33 KV	10(1)	Kanarpatti 400 KV SS
79	M/s.Gamesa Wind Turbines Pvt.Ltd	Rengasamudhram SS	2 x 25 MVA 110/33 KV	10(1)	Thappagundu 400 KV SS
80		Renganathapuram SS	4 x 25 MVA 110/33 KV	10(1)	Proposed Rasipalayam 400 KV SS
81	M/s.Gamesa Wind Turbines Pvt.Ltd.	Chinnakalaiyi SS	4 x 25 MVA 110/33 KV	10(1)	Thappagundu 400 KV SS

.....5

82		Mylaiyapatti SS	4 x 50 MVA 230/33 KV	10(1)	Proposed Rasipalayam 400 KV SS
83	M/s Gamesa Wind Turbines Pvt Ltd.	Thennala SS	4 x 50 MVA 230/33 KV	10(1)	Proposed Rasipalayam 400 KV SS
84	M/s.Leitner Shriram Manufacturing Ltd.	Kundankulam SS	2x25 MVA 110/33 KV	10(1)	Newly to be proposed 400 KV SS
85	M/s.Sri Ganesh Wind Power Engineers Pvt.Ltd	Elumalai SS	2x25 MVA 110/33 KV	10(1)	Thappagundu 400 KV SS
86.	M/s.SAV Construction	Omanakulam SS	4 x 50 MVA 230/33 KV	10(1)	Kanarpattii 400 KV SS
87	M/s.Green Infra Limited	Manur	2x25 MVA 110/33 KV	10(1)	Kanarpattii 400 KV SS
88	M/s.Green Infra Limited	Anuthapuram	2x25 MVA 110/33 KV	10(1)	Kanarpattii 400 KV SS
89*	M/s.Global Wind Power Ltd.	Kadayam	1x25 MVA 110/33 KV	10(1)	Kanarpattii 400 KV SS
90	M/s.Trishe Developers Private Limited	Eppodumvenran	2x50 MVA 230/33 KV	10(1)	Proposed Thennampatti 400 KV SS
91	M/s.Cape Infrastructure Private Limited	R.I. Kulam	4x50 MVA 230/33 KV	10(1)	Kayathar 400 KV SS
92.	M/s. Kenersys India Private Limited	Ammapatti	2x25 MVA 110/33 KV	10(1)	Kayathar 400 KV SS
93	M/s. Kenersys India Private Limited	Agilandipuram	4x50 MVA 230/33 KV	10(1)	Kayathar 400 KV SS
94	M/s.Suzlon Power Infrastructure Ltd	Pudhur	2x25 MVA 110/33 KV	10(1)	Kanarpattii 400 KV SS
95	M/s.Suzlon Power Infrastructure Ltd	Tenkulam	2x50 MVA 110/33 KV	10(1)	Proposed Thennampatti 400 KV SS
96	M/s.Enercon (India) Infrastructure Pvt.Ltd	Vannikonendal	3x25 MVA 110/33 KV	10(1)	Kanarpattii 400 KV SS
97	M/s.Cape Infrastructure Pvt. Ltd.	Keelafral	4x50 MVA 230/33 KV	10(1)	Kayathar 400 KV SS

.....6

98	M/s.Gamesa Wind Turbines Pvt. Ltd.	Thuraiyur (Trichy District)	4x25 MVA 110/33 KV	10(1)	Thuraiyur 110 KV SS
99	M/s.Gamesa Wind Turbines Pvt. Ltd.	Erumaipatty (Namakkal District)	4x25 MVA 110/33 KV	10(1)	Pedanchanthai 230 KV SS
100	M/s.Lakshmanha Infratech	Kadambur	4x50 MVA, 230/33 KV	10(1)	Kayathar 400 KV SS
101	M/s.Sri Balaji Wind Tech	Chudamani (Karur District)	4x25 MVA 110/33 KV	10(1)	Proposed Vagarai 400 KV SS
102	M/s.Regen Power Tech.	Kannivadi (Vagarai area)	2x100 MVA 230/33 KV	10(1)	Proposed Vagarai 400 KV SS
103	M/s.Global Wind Power Ltd.	Kadayanallur	1x25 MVA 110/33 KV	10(1)	Kanarpatti 400 KV SS
		Total	**10800 MVA**		

SL.NO	400KV SUBSTATION	INSTALLED CAPACITY	60%
1	KAYATHAR 400/230/110KV SS	700	420
2	KANARPATTY 400/230/110KV SS	750	450
3	TENNEMPATTY 400/230 KV SS	1050	630
4	TAPPAGUNDU 400/110 KV SS	580	348
5	ANIKADAVU 400/230/110 KV SS	650	390
6	RASIPALAYAM 400/230/110 KV SS	900	540
7	VAGARAI 400/230/110 KV SS	1100	660
	TOTAL	**5730**	**3438**
	EXISTING	6370	3822
	TOTAL INSTALLED CAPACITY	12100	7260

Kayathar 400/230/110 KV SS

Sl. No.	SS Name	Capacity	Voltage Category	Company
1	Paneerkulam	2x50 (100)	230/33 KV 10(1)	M/s.Enercon
2	Villiseri	2x50 (100)	230/33 KV 10(1)	M/s Suzlon
3	Vellapaneri	1x50 (50)	230/33 KV 10(1)	M/s.Suzlon
4	Therkupatti	5x25 (125)	110/33 KV 10(1)	M/s.Enercon
5	Vellapaneri	2x25 (50)	110/33 KV 10(1)	M/s.Beta Wind Farm
6	Ayyananuthu	1x25 (25)	110/33 KV IDC	M/s Winwind
7	Paneerkulam	2x50 (100)	230/33 KV 10(1)	M/s.Enercon
8	Villiseri	2x50 (100)	230/33 KV 10(1)	M/s.Suzlon
9	Vellapaneri	1x50 (50)	230/33 KV 10(1)	M/s Suzlon
Total		700W	60%	420

Anaikadavu 400/230/110 KV SS

Sl. No.	SS Name	Capacity	Voltage Category	Company
	Mar-11			
1	Sadayarpalayam	2x50	230/33 KV 10(1)	M/s.Suzlon
2	Periapattai	3x50 (150)	230/33 KV 10(1)	M/s.Vestas
3	Anaikadavu	2x50 (100)	230/33 KV 10(1)	M/s.Regen
4	Sadayarpalayam	1x50 (50)	230/33 KV 10(1)	M/s.Suzlon
5	Periapattai	1x50 (50)	230/33 KV 10(1)	M/s Vestas
6	Anaikadavu	1x50 (50)	230/33 KV 10(1)	M/s.Regen
7	Nelali	2x25 (50)	110/33 KV 10(1)	M/s.Suzlon
8	Chokkanur	2x25 (50)	110/33 KV 10(1)	M/s.Enercon
9	Marudur	2x25 (50)	110/33 KV 10(1)	M/s.RRB
10	Anaikadavu	1x50 (50)	110/33 KV 10(1)	M/s.Regen
	Total	**650**	**60%**	**390**

Sl. No.	SS Name	Capacity	Voltage Category	Company
	Sep-11			
1	Ramnagar	2x25 (50)	110/33 KV 10(1)	M/s Gamesa
2	Vellapaneri	2x25 (50)	110/33 KV 10(1)	M/s.Beta Wind Farm
3	Vannikonendal ✓	1x25 (25)	110/33 KV 10(1)	M/s.Wind Force Mgt.
4	Kadayanallur	1x25 (25)	110/33 KV 10(1)	M/s.RRB
5	Ayyanaruthu ✓	1x25 (25)	110/33 KV 10(1)	M/s.RRB
6	Allankulam	1x25 (25)	110/33 KV 10(1)	M/s.Beta Wind Farm
7	Vellapaneri	2x25 (50)	110/33 KV 10(1)	M/s.Winwind
8	Vannikonendal ✓	4x50 (200)	230/33 KV 10(1)	M/s.Cape Infra.
9	Sayamalai	4x50 (100)	230/33 KV 10(1)	M/s Enercon
10	Moovirundhali	2x25 (50)	110/33 KV 10(1)	M/s.Wind Force Mgt.
11	Vellappaneri	2x25 (50)	110/33 KV 10(1)	M/s.Windwind
	Total	750	60%	450

Rasipalayam 400/230/110 KV SS

Sl. No.	SS Name	Capacity	Voltage Category	Company
1	Rasipalam	4x25 (100)	110/33 KV 10(1)	M/s Gamesa
2	Sankara Pandiya Palayam	4x25 (100)	110/33 KV 10(1)	M/s Gamesa
3	Periya Kumara Palayam	4x25 (100)	110/33 KV 10(1)	M/s.Enercon
4	Renganathapuram	4x25 (100)	110/33 KV 10(1)	M/s.Gamesa
5	Mylampatti	4X50	230/33 KV 10(1)	M/s.Gamesa
6	Thennilai	4X50	230/33 KV 10(1)	M/s.Gamesa
7	Sirukinar	4x25 (100)	110/33 KV 10(1)	M/s.Winwind Power energy
	Total	**900**	**60%**	**540**

Vagarai 400/230/110 KV SS

Sl. No.	SS Name	Capacity	Voltage Category	Company
1	Vagarai	4X50 + 2X100	230/33 KV 10(1)	M/s.Regen
2	Kulathu Palayam	4X25	1100/33 KV 10(1)	M/S.Maruthi wind park Developers & M/s.Hari Wind farm
3	Muthali Palayam	4X50	230/33 KV 10(1)	M/s.Suzlon
4	Patuthiyur	2X100	230/33 KV 10(1)	M/s.Regen
5	Kanniwadi	2X100	230/33 KV 10(1)	M/s.Vestas
	Total	1100	60%	660

Tennamoattv 400/230 KV SS

Sl. No.	SS Name	Capacity	Voltage Category	Company
1	Tennampatty	4X50	230/33 KV 10(1)	M/s Kairali Wind farm services
2	Sankaraperi	4X50	230/33 KV 10(1)	M/s Kairali Wind farm services
3	Thirumalpuram	5X50	230/33 KV 10(1)	M/s.Gamesa
4	Pasuvanthanai	4X50	230/33 KV 10(1)	M/s Trishe Developers
5	Othaipidaram	4X50	230/33 KV 10(1)	M/s.Trishe Developers
Total		**1050**	**60%**	**630**

Data for Renewable Energy Resources and its Transmission Infrastructure

Name of the State Andhra Pradesh

(A) **Existing RES**

(i) Total Installed Capacity (MW)		
Wind	192.84 MW	
Solar PV	3MW	
Solar Thermal		
Small Hydro	55.7 MW	
Biomass/Waste to Energy	239.15 MW	
Bagasse cogen.	179.15 MW	

(ii) Availability

	Injection (MW/kW)		Injection in Grid Peak/off peak h'rs (MW/kW)	
	Maximum	Minimum	Peak	Off Peak
Wind				
Solar PV				
Solar Thermal				
Small Hydro				
Biomass/Waste to Energy				

(iii) **Network Connectivity**

Type- Wind / Solar/SHP/Biomass/WTE) etc.

Area-

Sno.	Developer	Installed Capacity (kW/MW)	Location (Vill/Dist)	Transmission Scheme (details like name of line (D/c or S/c), voltage level (kV), length, Conductor type etc.		Maximum Injection (kW/MW)	Name of 220 kV STU S/s for above Injection	Tr. System beyond injection point
				Immediate Evacuation	Associated Strengthening, if any			
1	M/s Sero Power & Infrastructures Ltd.,	6	Mahaboobnagar					
2	M/s Sree Rayalaseema Green Energy Ltd.,	5.5	Kurnool					
3	M/s Suchand Power Gen (P) Ltd.,	6	Kurnool					
4	M/s Harsha Power Projects (P) Ltd.	1	Medak					
5	M/s Sree Rayalaseem Alkalies & Allied Chemicals Ltd.,	3	Ananthapur					
6	M/s IL & FS Wind Farms Ltd.	8.5	Ananthapur					
7	M/s Weizmann Ltd.,	3	Ananthapur					
8	M/s Weizmann Ltd.,	3	Ananthapur					
9	M/s Weizmann Ltd.,	2	Ananthapur					
10	M/s Renewable Energy Systems Ltd.	8.5	Ananthapur					
11	M/s WESCARE (INDIA) Ltd	4.25	Ananthapur					
12	M/s RCI Power Pvt. Ltd.	20	Ananthapur					
13	M/s Sree Rayalaseema Power Corpn. Ltd	1.89	Ananthapur					

Data received from AP TRANSCO during visit of POWERGRID officials on 27.12.2011 & 28.12.2011

ANDHRA PRADESH

14	M/s NCL Energy Ltd.	7.5	Kurnool				
15	M/s [illegible]	2.25	Kurnool				
16	M/s [illegible]	2	Ananthapur				
17	M/s [illegible]	3	Ananthapur				
18	M/s [illegible]	10	Ananthapur				
19	M/s Hyderabad Chemical Supplies Ltd.	2	Ananthapur				
20	M/s Hyderabad Chemical Products Ltd	0.25	Ananthapur				
21	M/s Sree Vasavi Industries Ltd.	1	Ananthapur				
22	M/s Sierra Software & Ind. Ltd.	1	Ananthapur				
23	M/s Deccan Cements Ltd.	1.025	Ananthapur				
24	M/s Sagar Power Ltd.	4	Kurnool				
25	M/s Sunvera Power Pvt. Ltd.	0.99	Nalgonda				
26	M/s Janapadu Hydro Power Projects Pvt. Ltd.	1	Nalgonda				
27	M/s KM Power Ltd..	4	Kurnool				
28	M/s KM Power Ltd	2.0	Kurnool				
29	M/s KM Power Ltd.	4	Kurnool				
30	M/s NTL Power Ltd	4	Nalgonda				
31	M/s Hubergh Energies Ltd	3	Nalgonda				
32	M/s Veeraman Biocoil Pvt Ltd	1	Ananthapur				
33	M/s PSM Ltd.	1.6	Ananthapur				
34	M/s TVV Sipcode Ltd	1	Ananthapur				
35	M/s Nagarjuna Green Power Ltd (Ex Hema Power Ltd)	8	Hyderabad				
36	M/s Generation Sugar Ind Ltd	15	Medak				
37	M/s Gayatri Agro Ind Power Ltd..	6	Nalgonda				
38	M/s VLE Limited	2	Ananthapur				
39	M/s Anjani Sugars Ltd	2.025	Ananthapur				
40	M/s Selco International Ltd	6.6	Mahabubnagar				
41	M/s [illegible] Industries Ltd.	1	Ananthapur				
42	M/s Sree Rayalaseema Hi-Strength Hypo Ltd	8	Kurnool				
43	M/s Kamalapuram Industries Ltd	1	Mahabubnagar				
44	M/s Ramaya Power Projects Ltd	6	Khammam				
45	M/s Gowtham-Bio-Energies Ltd	6	Khammam				
46	M/s NCS Gayatri Sugars Ltd.	6	Nizamabad				
47	M/s Shri Krishna Constructions Ltd	6	Adilabad				
48	M/s Kalyan Spinning Mills Ltd.	4	Khammam				
49	M/s Saraswathi Power & NG Ltd	2	Karimnagar				
50	M/s Ingal Green Power Private Ltd..	6	Nizamabad				
51	M/s Kakatiya Cements Ltd	7.37	Khammam				
52	M/s Kakatiya Cements Ltd	9.01	Khammam				
53	Nizam Deccan Sugars Limited	8	Nizamabad				
54	DSR Sugars Pvt. Limited	15.5	Nizamabad				
55	M/s Gayatri Agro Industries limited	6	Nalgonda				
56	M/s The Bhavani Energy Limited	6	Nalgonda				
57	M/s SLL Power Limited	3.5	Nalgonda				
58	M/s NATL Power Limited	4.025	Nalgonda				
59	M/s Shalivahana Green Energy	12	Karimnagar				
60	M/s Spark Industries Limited	5.5	Khammam				
61	M/s SLS Power Limited	24	Khammam				
62	M/s Sucha Agro Oil & Chemical Industries Ltd	4	E.G District				
63	M/s Shree Papers Ltd.	4	E.G District				
64	M/s Sri Kalyani Agro Products & Inds. Ltd..	4	W.G District				
65	M/s Varam power Projects (P) Ltd.	6	Srikakulam				
66	M/s GMR Technologies & Industries Ltd	16	Srikakulam				
67	M/s Gowtham Solvent Oils Private Ltd	3.75	W.G District				
68	M/s Vasishtamsa Power Projects Ltd	3	E.G District				

69	M/s Sai Sai Power Infra	2	Vizianagaram				
70	M/s The Andhra Sugars Ltd	7	W.G District				
71	M/s Deccan Sugars,	2	E.G.District				
72	M/s Paradise Energy Systems Ltd	6	Vizianagaram				
73	M/s Rajapura Cooperative Ltd	1.5	Vizag				
74	M/s Chodavaram Co operative Sugars Ltd	7	Vizag				
75	M/s Vamshi Industries Ltd.	4	E.G.District				
76	M/s The Jeypore Sugar Company Ltd	12	W.G. District				
77	M/s Venkatesh Power Ltd	4	E.G. District				
78	M/s Sai Renewable Power Ltd	4.5	E.G. District				
79	M/s Textile & Fibre Limited	6	W.G. District				
80	M/s Raus Power (P) Limited	3.60	E.G. District				
81	M/s Jain Limited,	6	Guntur				
82	M/s Varma Power Pvt. Ltd.,	4.5	Guntur				
83	M/s Rohini Power Gen. Ltd.,	6	Krishna				
84	M/s Sai Power Projects (P) Ltd	4	Krishna				
85	M/s J-Gin Bio Energy Ltd	4.5	Prakasham				
86	M/s Veerabhadra Non-Conventional Power Projects Ltd.	4	Krishna				
87	M/s Vijay Agro Products Pvt. Ltd	4	Krishna				
88	M/s HCL Agro Power Ltd	5	Krishna				
89	M/s Sri Sai Agruta Sugars Limited	5	Chittoor				
90	M/s SLS Power Ltd.,	5	Nellore				
91	M/s Triumphant Hyde Power Projects (P) Ltd.,	2.4	Guntur				
92	M/s Sri Chandrashekhar Cotton & Rice Mills Ltd.	6.190	Guntur				
93	M/s Shree Lakshmi Power Corp Ltd	4	Guntur				
94	M/s Sai Power Projects Ltd	1.5	Prakasham				
95	M/s Ucem Power Systems Ltd	6.5	Prakasham				
96	M/s Escar Pak Ltd	1.85	Guntur				
97	M/s Akshay Pickles Private Ltd	1	Guntur				
98	M/s RPC Ltd	3	Guntur				
99	M/s Shivani Power Spinners Ltd.	0.75	Guntur				
100	M/s KCP Ltd	4.5	Guntur				
101	M/s KCP Ltd	9.75	Guntur				
102	M/s Active Power Generation Private Ltd	1.4	Krishna				
103	M/s RMD Power Private Ltd.	0.55	Guntur				
104	M/s KMS Power Ltd	5	Guntur				
105	M/s Rithwik Energy System Ltd	5	Chittoor				
106	M/s Deccan Cements Ltd	3.75	Guntur				
107	M/s Sagar Sugars & Allied Products Ltd	20	Chittoor				
108	M/s Shree Vasavi Sugars Ltd	3	Chittoor				
109	M/s Dalal Agro Oils Ltd.	4.5	Krishna				
110	M/s Sagar power Ltd	4.5	Guntur				
111	M/s Agri Gold Projects Ltd	4	Prakasham				
112	M/s G Sankaiah & Co. (projects) Ltd.	5	Nellore				
113	M/s Sri Sai Biomass Power Ltd.	5	Cuddapah				
114	M/s Jyothi Bio Energy Ltd	5	Prakasham				
115	M/s Clariant Power Corp Ltd.	12	Prakasham				
116	M/s Om Shakti energies Ltd	5	Chittoor				
117	M/s Sri Sai Sugars Ltd	6	Krishna				
118	M/s TTD	8	Chittoor				
119	M/s WCDPL	2.5	Nellore				
120	M/s Sarva Mangalam Power Corporation Ltd (Hyderabad)	6	Guntur				
121	M/s Sri Power Generation (India) Pvt. Ltd	2	Chittoor				
122	M/s FIFA Chem Ltd (group)	60.0	Krishna				

(B) **Future Potential Locations and capacity**

Wind	
RAMAGIRI	241.3
KONDAPURAM	179.1
URAVAKONDA	1185.2
KALYANDURG	461
ANANTAPUR/ B.K.SAMUDRAM	152.8
JAMMALAMADUGU	281.4
PORUMAMILLA	269
BALAPANUR	80
RACHERLA	224.45
KURNOOL/NANMUR	35
YERRAGUNTLA	60
Total Wind	3149.25 MW
Solar PV (Ananthapur Dist.)	25.5 MW
Solar Thermal	57 MW
Small Hydro	0
Biomass/Waste to Energy	27 MW (Mahabubnagar, Krishna & Karimnagar Districts)

(C) **RES Capacity Addition Programme in 12th plan**

(i)

Type	2012-13	2013-14	2014-15	2015-16	2016-17
Wind	1503.2 MW	1435.3 MW	-	-	-
Solar PV	25.5 MW	-	-	-	-
Solar Thermal	57 MW	-	-	-	-
Small Hydro	0	-	-	-	-
Biomass/Waste to Energy	27 MW	-	-	-	-

** The information for the year 2014-15, 15-16 & 2016-17 will be furnished after receiving the same from NREDCAP

(ii) **Network connectivity for above proposed capacity additon, if any**

Sl.No.	Developer	Installed Capacity (kW/MW)	Location (Vill/Dist)	Transmission Scheme (details like name of line (D/c or S/c), voltage level (kV) length, Conductor type etc.		Maximum Injection (kW/MW)	Name of 220 kV STU S/s for above Injection	Tr. System beyond injection point
				Immediate Evacuation	Associated Strengthening, if any			

(D)	Renewable Purchase Obligation (RPO) Quantum				
	Year	Min. quantum of purchase (in %) from RES (in terms of energy in kwh)			
		Wind	Solar	Biomass/WTE	Total
	2011-12	-	0.25%	4.75%	5%
	2012-13	-	0.25%	4.75%	5%
	2013-14	-	0.25%	4.75%	5%
	2014-15	-	0.25%	4.75%	5%
	2015-16	-	0.25%	4.75%	5%

E:\common information\Input Data Format_powergrid_201211.xls]Data

Name of the State:ANDHRA PRADESH

(B) Future Potential Locations and Capacity

Total Installed Capacity (MW)	
Wind	3148
Solar PV	
Solar Thermal	
Small Hydro	
Biomass/Waste to Energy	

(C) RES Capacity Addition Programme in 12th Plan

	2011-12	2012-13	2013-14	2014-15	2015-16	2016-17
Wind						
Solar PV						
Solar Thermal						
Small Hydro						
Biomass/Waste to Energy						

Network Connectivity for above proposed capacity addition, if any

Type (Wind/Solar/SHP/Biomass/Waste etc.)
Area-

S.No	Developer	Installed Capacity (MW)	Location (Vill/Dist)	Transmission Scheme (details like name of the line(s) or S/S),Voltage level (kV), length,Conductor type etc.		Maximum Injection (MW/MVA)	Name of 220 kV STU S/s for above Injection	Transmission beyond Injection point
				Immediate Evacuation	Associated Strengthening, if any			
1	[illegible]	30	Thirumalayapalli		220 kV DC Moose Line from 400 kV Kondapuram SS to 220kV Thirumalayapalli pooling station with (2x160 MVA PTR)		220kV Thirumalayapalli SS	
2	[illegible]	99.4	Thirumalayapalli				220kV Thirumalayapalli SS	
3	[illegible]	49.5	Thirumalayapalli				220kV Thirumalayapalli SS	
4	Speed [illegible]	10.0	Thirumalayapalli				220kV Thirumalayapalli SS	
5	[illegible]	24	Thirumalayapalli				220kV Thirumalayapalli SS	
6	[illegible]	20	Thirumalayapalli				220kV Thirumalayapalli SS	
7	[illegible] Farms	19.6	Bethamcherla		220KV DC Moose Line from 400 KV Kondapuram SS to 220KV Bethamcherla pooling station with (2x120 MVA PTR)		220 kV Bethamcherla	
8	[illegible] Farms	19.5	Bethamcherla				220 kV Bethamcherla	
9	[illegible] Farms Pvt Ltd	19.5	Bethamcherla				220 kV Bethamcherla	
10	[illegible]	19	Yemmiganur				220 kV Bethamcherla	
11	[illegible] Green Power	20	Bethamcherla				220 kV Bethamcherla	
12	NSL Renewable Energy	27	Siddamagani				220 kV Bethamcherla	
13	Perpetual Energy Systems	15	Gundakonda				220 kV Bethamcherla	
14	Sagarika	22	Bethamcherla				220 kV Bethamcherla	
15	[illegible]	102.8	Bethamcherla				220 kV Bethamcherla	

[illegible]	50	Avinashi	220KV DC Moose Line from 400 KV Kondapuram SS to 220KV Chakrayapalem pooling station with (2x125 MVA PTR)	220 KV Chakrayapalem	400 KV Kondapuram	
[illegible]	30	Palakonda [illegible]		220 KV Chakrayapalem		
[illegible]	19.5	Payalakonda	220KV DC Moose Line from 400 KV Kondapuram SS to 220KV Porumamilla pooling station with (2x100 MVA PTR)	[illegible]		
[illegible]	40.5	Payalakonda		220 KV Porumamilla		
[illegible]	200	Payalakonda		220 KV Porumamilla		
21 [illegible]	25	Jammala Madugu	220KV DC Moose Line from 400 KV Kondapuram SS to 220KV Jammalamadugu pooling station with (2x150 MVA PTR)	220 KV Jammala Madugu		
22 [illegible] Wind Energy	52	Talarichervu		220 KV Jammala Madugu		
23 [illegible] Energy	52	Talarichervu		220 KV Jammala Madugu		
24 Renewable Energy	23	Talarichervu		220 KV Jammala Madugu		
25 TR Renewable Energy	23	Talarichervu		220 KV Jammala Madugu		
26 Genesis Wind Energy	19.5	Talarichervu		220 KV Jammala Madugu		
27 RSD Power Pvt Ltd	19.5	Talarichervu		220 KV Jammala Madugu		
28 Suzlon	24.8	Talamadugula		220 kV Penukonda		
29 Hopen Power Tech	42	Pavagadamandem	220KV DC Moose Line from 400 KV Hindupur SS to 220KV Penukonda pooling station with (2x125 MVA PTR)	220 kV Penukonda		
30 [illegible] Wind Energy	67	Nellakonda		220 kV Penukonda		
31 Navoday green energy	19.5	Mutchukovella		220 kV Penukonda		
32 [illegible] Tech	42	Madugupalli	220KV DC Moose Line from 400 KV Hindupur SS to 220KV Pampanur Thanda pooling station with (2x100 MVA PTR)	220kV Pampanur Thanda	400 kV Hindupur	
33 [illegible] Passport [illegible] Holdings Co Ltd	12.8	Singadamada		220kV Pampanur Thanda		
34 Pavo Wind Energy	24.5	MPR gam Perakacherla		220kV Pampanur Thanda		
35 [illegible] Power Ltd	15	Pampanur Thanda		220kV Pampanur Thanda		
36 [illegible] Wind Energy	100	Pampanur Thanda		220kV Pampanur Thanda		
37 Sterlite Power	20	Pampanur Thanda		220kV Pampanur Thanda		
38 [illegible] Wind Energy	50	Pampanur Thanda		220kV Pampanur Thanda		
39 Hayala Wind Farms	100	Bevaverkotapuram		220kV Pampanur Thanda		
40 Hayala Wind Farms	100	B Vemarapuram		220kV Pampanur Thanda		
41 [illegible] Wind Energy	100	Varakarur	220KV DC Moose Line from 400 KV Uravakonda SS to 220KV Varakarur pooling station with (2x100 MVA PTR)	220 kV Varakarur		
42 [illegible] Energy Services	100	Varakarur		220 kV Varakarur		
43 [illegible]	20	Varakarur		220 kV Varakarur		
44 [illegible] Wind Energy	200	Varakarur		220 kV Varakarur		
45 [illegible] Energy	100	Varakarur		220 kV Varakarur		
46 [illegible] Green Energy Ltd	20	Varakarur		220 kV Varakarur	400 kV Uravakonda	
47 Renesa Wind Turbines	200	Kayandurg (Jaggapathi Hamula)		220 kV Gooty		
48 [illegible]	22	Bommagani	220KV DC Moose Line from 400 KV Gravekonda SS to 220KV Bommaganipally pooling station with (1x100 MVA PTR)	220 kV Bommaganipalli		
49 [illegible] Wind Energy	100.7	Bommagani		220 kV Bommaganipalli		
50 [illegible] Wind Energy	100	Bommagani		220 kV Bommaganipalli		
51 [illegible] Wind Energy	150	Uravakonda		220 kV Bommaganipalli		
52 Navayuga Green Energy	20	Uravakonda		220 kV Bommaganipalli		
Total	3145					

[illegible] Renewable Purchase Obligation (RPO) Quantum

Year	Min quantum of purchase (in %) from RES (in terms of energy in kWh)			
	Wind	Solar PV	Biomass/WTE	Total
[illegible]				
[illegible]				
[illegible]				
[illegible]				
[illegible]				

Name of the State:ANDHRA PRADESH

(A) Existing RES

(i)

Total Installed Capacity (MW)	
Wind	
Solar PV	
Solar Thermal	
Small Hydro	
Biomass/Waste to Energy	

(ii) Availability

	Injection(MW/KW)		Injection in G/to Peak/off Peak hrs (MW/KW)	
	Maximum	Minimum	Peak	Off Peak
Wind				
Solar PV				
Solar Thermal				
Small Hydro				
Biomass/Waste to Energy				

(c) Network Connectivity

Type-Wind/Solar/SHP/Biomass(wte) etc.
Area-

S No	Developer	Installed Capacity (KW/MW)	Location (Vill/Dist)	Transmission Scheme (details like name of the line(d/c or S/c), Voltage level (kV), length, Conductor type etc.		Maximum Injection (KW/MW)	Name of 220 kV STU S/s for above injection	In system beyond injection point
				Immediate Evacuation	Associated Strengthening ,If any			
1	Ramagiri		Anantapur/ Anantapur					
2	Komatikuntla		Tadipatri/ Anantapur					
3	Ankiteredypally		Tadipatri/ Anantapur					
4	RC Puram(Bio mass)		Gachibowli Hyderabad					
	Total	0						

DETAILS OF WIND POWER PROJECTS AND PLF DURING THE YEAR 2010-2011

S.No	Project	Capacity in MW	Date of Commissioning	Generation during 2010-11 (KWh)	PLF(%)
I.DEMONSTRATION WINDFARMS					
1	Ramagiri Windfarm	2.00	Nov'94	0	0
2	Kondamodapally wind farm	2.75	31.03.2001	3652785	15.16
3	Narasimhakonda wind farm	2.50	07.05.2004	3251016	14.94
II.WIND POWER PROJECTS IN PRIVATE SECTOR					
LOCATION: RAMAGIRI					
C 1	The Andhra Sugars Ltd.,Tanuku	2.025	30.09.94	1899300	10.71
C 2	Deccan Cements Ltd.,Hyderabad	2.025	26.02.95	2705700	15.25
C 3	TTW-Signode India Ltd.,Hyd.	1.00	25.05.95	908300	10.37
C 4	MILE Ltd.,Hyderabad	2.00	30.08.95	2145300	12.24
5	Renewable Energy Systems Ltd	6.50	20.09.95	0	0.00
6	BHEL,Hyderabad.	3.00	13.09.95	169200	0.64
C 7	Nagarjuna Construction Co. Hyd.	3.00	30.09.95	0	0.00
C 8	APSRTC.,Hyderabad	10.00	30.09.95	7600500	8.68
9	Weizmann Ltd.,Mumbai	3.000	30.09.96	2286200	8.70
10	D.&S.,Bombay.	6.50	26.12.95	5051300	8.87
C 11	Veeramani Biscuit Inds.,Hyd	1.00	10.01.96	208230	2.39
C 12	PSM Spinning Mills Ltd.,Hyd	1.80	08.03.96	2063900	13.09
C 13	Sree Rayalaseema Alkies, Hyd	3.00	27.05.96	1925940	7.33
C 14	RES Photovoltaic ltd,Hyd.	2.00	30.09.96	0	0.00
C 15	Sree Rayalaseema Power Copn., Hyd	1.89	31.03.97	31750	0.19
C 16	IOL Industries Ltd, Hyd	1.00	30.09.97	200700	2.29
	LOCATION: TALLIMADUGULA				
	Weizmann Ltd,Mumbai	5.00	06.08.98	3299900	7.53
	LOCATION: KADAVAKALLU				
17	RCI Power Ltd (Phase I)	20.00	31.03.2000	22864075	13.05
18	Hyderabad Chemicals Supplies, Hyd.				
C 20	Vasavi Industries Ltd,Hyd	1.00	Aug'99	253774	2.69
ii	BHEL, Ranipet	4.00	23.9.1999	4302800	12.28
21	WESCARE (India) Ltd	4.25	31.3.2000	3929900	10.56
22	Sarita Software & Ind.ltd	1.00	30.08.2000	710390	8.11
	Kakulakonda, Tirumala Hills				
C 23	TTD	0.23	27.03.2003	476077	23.63
C ii	TTD	6.00	19.02.2004	12592257	23.96
C iii	TTD	0.80	27-01-2007	1532226	21.86
	Location: Kadavakallu area				
24	Dr. Kasu Prasad Reddy,	0.45	31.03.2005	981400	8.20
25	Maruseen Laser Centre Pvt. Ltd,	0.45	31.03.2005		
26	Vimal Roller Flour Mills	0.275	29.09.2005		
27	V V Agro Foods.	0.225	29.09.2005		

Anubhav Pradhan 27.[illegible].2012

RES capacity addition programme in 12th plan

TYPE	2011-12	2012-13	2013-14	2014-15	2015-16	2016-17	TOTAL
WIND	210.75	1503.20	1435.30	256.60	1202.20	650.30	5258.35
SOLAR	94.5	15	0	120	100	50	379.5
Biomass/Waste Energy	27	0	0			0	27
Total	332.25	1518.20	1435.30	376.60	1302.20	700.30	5664.85

Capacity addition during 2014-17	
Wind	2108.10
Solar	270.00

Dollar received from DSR (OA), AP TRANSCO during meeting with Secretary, MNRE on dt. 27.1.2012

ANNEXURE – I

AREA WISE/YEAR WISE PROPOSED WIND FARM CAPACITY ADDITIONS					
S.No	AREA	2011-12	2012-13	2013-14	TOTAL
1	RAMAGIRI	64.80	157.00	19.50	241.30
2	KONDAPURAM	0.00	0.00	179.10	179.10
3	URAVAKONDA	24.50	410.00	750.70	1185.20
4	KALYANDURG	0.00	215.00	246.00	461.00
5	ANANTAPUR/ B.K.SAMUDRAM	12.80	140.00	0.00	152.80
6	JAMMALAMADUGU	50.00	191.40	20.00	261.40
7	PORUMAMILLA	0.00	69.00	200.00	269.00
8	BALAPANUR	0.00	80.00	0.00	80.00
9	RACHERLA	58.65	145.80	20.00	224.45
10	KURNOOL/NANNUR	0.00	35.00	0.00	35.00
11	YERRAGUNTLA	0.00	60.00	0.00	60.00
	TOTAL In MW	210.75	1503.20	1435.30	3149.25
				Say	3150.00

1/3

WIND FARM CAPACITIES EXPECTED TO BE COMMSSIONED FROM 2011-2014 - DEVELOPER/ZONE/YEARWISE

S.No	DEVELOPER/ZONE	RAMAGIRI			KONDAPURAM			URAVAKONDA			KALYANDURG			ANANTAPUR/ B.K.SAMUDRAM		
		2011-12	2012-13	2013-14	2011-12	2012-13	2013-14	2011-12	2012-13	2013-14	2011-12	2012-13	2013-14	2011-12	2012-13	2013-14
1	Enercon (India) Limited															
2	JN Investments & Trading													12.80		
3	Suzlon Group	24.80														
6	Axis Wind Energy		57.00					24.50	250.00	200.00						
12	ReGen Power Tech	40.00														
13	Hetero Drugs								100.00	130.00						
14	Malaxmi Virtual								20.00							
15	Gamesa Wind Turbines						19.55					200.00				
16	Rayala Wind farms		100.00												100.00	
17	Helios Infratech														40.00	
18	NSL Power											15.00				
20	Theta Wind Energy									300.70			176.00			
21	Sierra Mines												20.00			
22	KSK Wind Energy						50.00			100.00			50.00			
23	Ecoren Energy									20.00						
24	Vision Renergies						50.00									
25	Renewable Energy						20.00									
26	ZR Renewable Energy						20.00									
27	RSR Power						19.55									
28	Naveen Green Energy			19.50					20.00							
27	Shalivahana green energy								20.00							
	TOTAL	64.80	157.00	19.50	0.00	0.00	179.10	24.50	410.00	750.70		215.00	246.00	12.80	140.00	

2/3

WIND FARM CAPACITIES EXPECTED TO BE COMMSSIONED FROM 2011-2014 - DEVELOPER/ZONE/YEARWISE

S.No	DEVELOPER/ZONE	JAMMALAMADUGU			PORUMAMILLA			BALAPANUR			BACHERLA			KURNOOL/NANNUR		
		2011-12	2012-13	2013-14	2011-12	2012-13	2013-14	2011-12	2012-13	2013-14	2011-12	2012-13	2013-14	2011-12	2012-13	2013-14
1	Enercon (India) Limited		98.40													
2	Suzlon Group	20.00														
3	Axis Wind Energy		49.50			49.50										
4	Anantapur Wind Frams										19.55					
5	Kurnool Wind Farms										19.55					
6	Kadapa Wind Farms										19.55					
7	Speed Vidyut		19.50													
8	Vinnirma Energy					19.50										
9	Hetero Drugs	30.00	24.00													
10	Helios Infratech											25.00				
11	Perpetual Energy														15.00	
12	Guttaseema Wind Energy								80.00							
13	Theta Wind Energy											100.80				
14	Swarna Power												20.00			
15	KSK Wind Energy						200.00									
16	NSL Renewable														20.00	
17	HES Infra Pvt. Lted			20.00												
18	M/s.Indur Green Energy											20.00				
	TOTAL	50.00	191.40	20.00		69.00	200.00		80.00		58.65	145.80	20.00		35.00	

S.No	DEVELOPER/ZONE	YERRAGUNTLA			PARIGI		
		2011-12	2012-13	2013-14	2011-12	2012-13	2013-14
	Animala Wind Power	–	60.00	–	–	–	–
	TOTAL	–	60.00	–	–	–	–

3/3

TOTAL 3149.25 (MW)

Solar Projects expected capacity addition in year 2011-12

Sl. No	Name of the Developer	Location	Capacity in MW
1	M/s Sri Power Generation (India) Ltd	Nellavoy, Chittoor Dist	1
2	M/s Ramakrishna Industries	Kishan Nagar Village, Shad Nagar Mandal, Mahaboobnagar District	1
3	M/s Andhra Pradesh Power Generation Corporation Ltd	Jurala Hydro Electric Scheme, Mahaboobnagar District	1
4	M/s Sri Power Generation (India) Private Limited	Kotagullu Village, Kadiri, Kadiri Mandal, Ananthapur District	1
5	M/s Sai Sudhir Energy Ltd	Rayadurg, Ananthapur	5
6	M/s Welspun Solar	Pulivendula, Kadapa	5
7	M/s Andromeda Energy Technologies Private Limited	Avanchia Village, Narsapur Manda, Medak District	0.75
8	M/s Gajanan Financial Services Pvt. Ltd	Laddagiri Village, Kurnool District	1
9	M/s Photon Energy Systems Ltd.	Nandipet Village, Manikpet Mandal, Rangareddy District	1
10	M/s Andhra Pradesh Industrial Infrastructure Corporation Ltd	Industrial Park, Gooty, Ananthapur District	1
11	M/s Arvind Jai Ventures Pvt. Ltd.	Kotagullu Village, Kadiri Mandal, Ananthapur District	1
12	M/s Bhavani Engineering	Madhava Yedavally, Narketpally Mandal, Nalgonda District	1
13	M/s Rishabh Electro Infra Pvt. Ltd	Perecherla Village, Guntur Rural, Guntur District	1
14	M/s Solar Semiconductor Pvt Ltd	Plot No 6, Survey No.114/P, Srinagar Village, Mahesheswaram Mandal, Rangareddy District	0.75
15	M/s Suryachakra power	Kadiri, Ananthapur dist.	7
16	M/s Ritwik Projects Pvt Ltd	Kadiri, Ananthapur	15
17	M/s Megha Engineering and Parundi, Ananthapur		50
18	M/s NTPC Limited	Ramagundam, Karimnagar dist.	10
		Total	94.5

Solar Projects expected capacity addition in year 2012-13

Sl. No	Name of the Developer	Location	Capacity in MW
1	M/s NTPC Limited	Ramagundam, Karimnagar dist.	15
		Total	15

EXPECTED CAPACITY ADDITION IN 2014-2017

2014-15

S.No.	Developer	Proposed capacity in MW	Location / District	Nearest Grid substation
1	Geoenergy & Infra Projects Pvt. Ltd	20.00	Siddanagatta, Kurnool	220/33 KV at Nanpur
2	Gamesa Wind Turbines Pvt. Ltd	19.55	.do.	.do.
3	Highcons Green Energy Developers	20.00	Burugula, Kurnool	132/33 KV at Racharla
4	Hetero Wind Power	99.00	Rakatla, Anantapur	132/33 KV at Uravakonda
5	Axis Wind Energy	25.20	MPR Dam, Anantapur	.do.
6	Hetero Wind Power	40.50	Bhadrampalli Kottala, Anantapur	-do-
7	Shubh Reality (South) Ltd	4.80	Vajrakarur, Anantapur	132/33 KV at Uravakonda
8	Bindu Vayu Urja Pvt. Ltd	20.00	Burgula, Kurnool	132/33 KV at Rachorla
9	NREDCAP	5.95	Rekulakunta, Anantapur	220/33 KV at Bukkarayasamudram
10	NREDCAP	1.60	Kondamedapalli, Kurnool	132/33 at Ankireddipalli
		256.60		

2015-16

S.No.	Developer	Proposed capacity in MW	Location / District	Nearest Grid substation
1	Mytrah Energy (India) Ltd	100.00	Nazeerabad, Rangareddy	132/33 KV at Parigi
2	Hetro Energy Projects Pvt. Ltd	163.50	Kotakodu, Anantapur	132/33 KV at Uravakonda
3	Vestas Wind Technology Pvt. Ltd	50.00	Kundanakota site, near Burugula, Kurnool	132/33 KV at Racherla

4	Vestas Wind Technology Pvt. Ltd	21.60	B Kottapalli, near Payalakuntla, Kadapa	132/33 KV at Posamanilla
5	NESCO Wincon Pvt. Ltd	300.00	Duddekunta, Anantapur	132/33 KV at Kalyandurg
6	Gar Trading Corpn. Pvt. Ltd	150.40	Rudrampalli, Anantapur	132/33 KV at Uravakonda
7	Enercon Wind Farms (Gadag) Pvt. Ltd	93.60	South Dhone, Mettupalli & Eddupenta RFs and Mettupalli & Kottapalli V Kurnool	132/33 KV at Dhone
8	JN Investments & Trading Co. Pvt. Ltd	4.00	Singanamala, Anantapur	220/33 KV at Bukkaraisamudram
9	Enercon India Ltd	49.60	Mutssukota RF, Aantapur	220/33 KV at Kondapuram
10	Enercon India Ltd	35.20	Dorigallu, Anantapur	132/33 KV at Lingala
11	Enercon Wind farm (Samana) Pvt.Ltd	32.00	Kunukuntla, Anantapur	132/33 KV at Tadimarri
12	Enercon Wind Farms (Gadag) Pvt.Ltd	11.20	Dorigallu, Anantapur	132/33 KV at Lingala
13	Enercon Wind farm A.P. Pvt Ltd	29.60	Kunukuntla, Anantapur	132/33 KV at Tadimarri
14	NCS Sugars	42.00	Badrampalli RF, Anantapur	132/33 KV at Uravakonda
15	NCS Sugars	100.00	Katrimala RF, Anantapur	do.
16	Sumo Foods Projects Pvt. Ltd	19.50	Siddanagattu, Kurnool	220/33 KV at Nannur
		1202.20		

2016-2017

S.No.	Developer	Proposed capacity in MW	Location / District	Nearest Grid substation
1		48.30	Vellatla RF, Anantapur	132/33 KV at Balapanur
2		18.90	Devanagudi RF, Kurnool	220/33 KV at Boireddypalli

3	Suzlon Energy Ltd	52.50	Yadiki, Anantapur	.do
4		37.80	Pedapai RF, Kurnool	.do.
5		22.50	Killavaripalli, Anantapur	132/33 KV at Balapanu
6		76.50	Bhanukotamala & Kondapuram RF, Kadapa	220/33 KV at Kondapuram
7		111.00	Kuderu RF, Anantapur	220/33 KV at Kalyandurg
8		52.20	Yarapalapadu RF, Kurnool	220/33 KV at Nannur
9		40.20	Ramallakonda RF, Kurnool	220/33 KV at Nannur
10	Hetro Energy Projects Pvt. Ltd	150.40	Guntvepalli, Anantapur	.do.
11	Sarjan Realities Ltd	40.00	Ramagiri East & West RFs, Anantapur	220/33 KV at Ramagiri
		650.30		

SOLAR POWER

2014-15

Proposed capacity in MW	Location / District	Nearest Grid substation
20.00	T. Veeravaram	132/33 KV at Rayadurg
50.00	Nennal, Adilaba district	220/33 KV at Bellampalli
50.00	Kadiri, Anantapur district	132/33 KV at Kadiri

2015-16

Proposed capacity in MW	Location / District	Nearest Grid substation
50.00	Gattu, Mahaboob Nagar district	132/33 KV at Gadwal
50.00	Kadiri, Anantapur district	132/33 KV at Kadiri

2016-17

Proposed capacity in MW	Location / District	Nearest Grid substation
50.00	Gattu, Mahaboob Nagar district	132/33 KV at Gadwal

Data for Renewable Energy Resources and Its Transmission Infrastructre

Name of the State: KARNATAKA

(A) Existing RES

(i) Total Installed Capacity (MW)	
Wind	1783
Solar PV	6
Solar Thermal	-
Small Hydro	527
Biomass/Waste to Energy	117

(ii) Availability

	Injection (MW/kW)		Injection in Grid Peak/off peak hrs (MW/KW)	
	Maximum	Minimum	Peak	Off Peak
Wind	1350	15	450	1200
Solar PV	6	1	5	
Solar Thermal	-	-	-	-
Small Hydro	300	20	130	300
Biomass/Waste to Energy	80	20	75	40

(iii) Network Connectivity

Type- Wind / Solar/SHP/Biomass/WTE) etc.

Area-

Sno	Developer	Installed Capacity (kW/MW)	Location (Vill/Distt)	Transmission Scheme (details like name of line (D/c or S/c), voltage level (kV), length, Conductor type etc.		Maximum Injection (kW/MW)	Name of220 kV STU S/s for above injection	Tr. System beyond injection point
				Immediate Evacuation	Associated Strengthening, if any			
1	SUZLON JOGIMATTI	32.5	JOGIMATTI	CHITRADURGA 220			CHITRADURGA	
2	HUTTI GOLD MINES PVT LTD.	9	CHITRADURGA	CHITRADURGA 220			CHITRADURGA	
3	ENERCON	2.76	CHITRADURGA	CHITRADURGA 66			CHITRADURGA	
4	JINDAL	4.14	MADAKARIPURA	CHITRADURGA 66			CHITRADURGA	
5	NEG MICON	49.65	CHITRADURGA	CHITRADURGA 66			CHITRADURGA	
6	ENERCON	19.5	JOGIMATTI	CHITRADURGA 66			CHITRADURGA	
7	MMCL	9.6	HD PURA	H D PURA 66			CHITRADURGA	
8	SUZLON INSFRASTRUCTURES SERVICES Ltd	15	ELKURANAHALLI HILLS	MANGALA 66			CHITRADURGA	

Data Received from KPTCL during visit of POWERGRID officials on 21-22 Dec' 11

KARNATAKA

9	POWER	7	MANGALA	MANGALA 66			CHITRADURGA	
10	EMERCON	42.4	HANUMANAHALLI	PANDARAHALLI 110			CHITRADURGA	
11	SURYA PROJECT SOLAR PRIVATE LTD	9	BETTADAHALLI	PANDARAHALLI 66			CHITRADURGA	
12	RENKA & RANKA	8.25	PANDARAHALLI	PANDARAHALLI 11			CHITRADURGA	
13	RELIANCE ENERGY LTD	7.5	MANGALA	CHITRADURGA 220 KV			CHITRADURGA	
14	SE ENERGY PRIVATE LTD (Formerly Suzlon)	37.6	SHIRAMASAGAR	SHIRAMASAGAR PP 66			CHITRADURGA	
15	NESTAS RPS INDIA LTD	24.55	BASAVAPATNA	BASAVAPATNA 66			SRS DVG	
16	NUJUVEEDU SEEDS LTD.	25.5	CHIKKAKADAVU	CHIKKAKADAVU 66			CHITRADURGA	
17	NUJUVEEDU SEEDS LTD.	27.45	NIDGOD VILLAGE	JOGALUR 66			CHITRADURGA	
18	SUZLON	25	NICHAPURA	HARAPANAHALLI 66			ITAGI	
19	SUZLON	45.5	ELURAKANALLI HALLI	HIRIYUR 220			HIRIYUR	
20	ENERCON	7.5	GOVINAHALLI	HIRIYUR 220			HIRIYUR	
21	ENERCON	57.8	VELLADIKERE AND G KERALGERE VILLAGE	JATHOO 66			TIPTUR	
22	NANDAN HOSUR GROUP	8.5	RANAGOD	RANAGOD 66			HONNALI	
23	NESTAS WIND TECHNOLOGIES/ROODNA WIND EN	29.7	ANABURU/RANGHAGUNDI	HOSAHALLI/ANAVOLE 66			FALLAK	
24	SUZLON WIND FORM	8.25	LOVUR KOPPALU	LOVUR KOPPALU SIS 66			HASSAN	
25	SUZLON	52.5	SOOT	TAGI 66			TAGI	
26	SUZLON	05.25	GUNAKIR	HIREHADAGALI 66			ITAGI	
27	SUZLON	17.5	KOTTUR	KOTTUR 66			ITAGI	
28	GUJGRAON	2.5	GURGAON	SHIKKODI 110			CHIKKODI	
29	SHRIRAM POWER CORPORATION LTD	7.2	NARAGUND	NARAGUND 110			BOUNDATTI	
30	SUZLON	46	ARGERE	GAMBAL 110			GADAG	
31	ENERCON	22.6	HIREWADDATTI	GAMBAL 110			GADAG	
32	ENERCON	37	BANNIKOPPA	BELLATI 110			GADAG	
33	VICTORY GLASS WIND	1.5	NIDGUNDI	GADAG 110			GADAG	
34	NAI WIND	6	MALLASANDRA	GADAG 110			GADAG	
35	TENSRU DEVELOPERS	5	BELLADAD	GADAG 110			GADAG	
36	POWER	2.5	SHIRUNDAVENKATAPURA	GADAG 110			GADAG	
37	KAPPATH GUDDA	4.5	KAPPATH GUDDA	GADAG 110			GADAG	
38	WIND	34	GAJENDRAGAD	GAJENDRAGAD 33			GADAG	
39	SUZLON	20.68	HALIYAL	HALIYAL 110			DANDEWADI	
40	SUZLON	85.75	BASEWADI	LILO B/W HAVERI-GUTTAL 110			HAVERI	
41	ENERCON	9.9	DASOODI	HIRUR 220			HIRYUR	
42	HARTI ENERCON	100.8	HARTHI	LILO BIDNAL-GADAG-LINGAPUR 220			HARTHI	
43	SUZLON WIND FORM PVT	66.5	GOPALPURA	GOPALPURA 220			GOPLAPURA	
44	M/S SUZLON ENERGY LTD	12	KUDREMONDA	HONNALI 220			HONNALI	
45	VESTAS	28.1	TELAGI	TELGI 66			SRS DVG	
46	ENERCON	33.4	MUNJUVALLI	SOUDATTI 110			BOUNDATTI	
47	M/S SANJAN REALTIES	12.6	KALLENAHALLI	DALAGATE 66			CHITRADURGA	
48	SUZLON	10.6	KUDREMONDA	KUNDOOR 66			HONNALI	
49	SUZLON	25	HONAPURA	GENEHALLI 66			ITAGI	
50	WIND MILL (DODALLUR)	15	DODDAVANNUVAR	CHIKKODI 110			CHIKKODI	
51	M/S TUPPADAHALLI ENERGY INDIA PVT LTD	57.75	TUPPADAHALLI	SHIVAMOGGA 110			KPTS SHIVAMOGGA	
52	KAMARADI WIND FARM ENERCON	24	KAMARADI	LILO B/W NARENDRA & BELGAUM 220			KAMARADI	

53	HARKANALU WIND FARM (NEREDCHARLA)	51.5	HARKANALU	FAC1220			TAGI	
54	WINWIND	1	NARAGAL	NARAGAL 11			GADAG	
55	RSA POWER	31.5	SIMHADRI	BHOJ 110			CHIKKODI	
	Total	1779.19						

(B) Future- Potential Locations and Capacity

Wind	11433
Solar PV	200
Solar Thermal	
Small Hydro	60
Biomass/Waste to Energy	140

(C) RES Capacity Addition Programme in 12th Plan

	2012-13	2013-14	2014-15	2015-16	2016-17
(i) **Type**					
Wind	536	550			
Solar PV	40	40	40	40	
Solar Thermal					
Small Hydro	150	100			
Biomass/Waste to Energy	70	70			

(ii) Network Connectivity for above proposed Capacity addition, if any

Type: Wind / Solar/SHP/Biomass/WTE) etc.

Area:

Sno	Developer	Installed Capacity (kW/MW)	Location (Vill/Distt)	Transmission Scheme (details like name of line (D/c or S/c), voltage level (kV), length, Conductor type etc.		Maximum Injection (kW/MW)	Name of220 kV STU S/s for above injection	Tr. System beyond injection point
				Immediate Evacuation	Associated Strengthening, if any			
1	Suzlon	175	B.Bagewadi	220kV Sc line on DC towers to 220kV B.Bagewadi S/s- Drake ACSR			220kV B.Bagewadi Sub-Station	
2	Fortum	67	B.Bagewadi	220kV Sc line on DC towers to 220kV B.Bagewadi S/s- Drake ACSR			220kV B.Bagewadi Sub-Station	
3	KSK Wind	210	Athani	220KV DC line to Athani – Drake ACSR			220kV Athani Sub Station	
4	NTPC	100	Bagalkote	220kV Sc line onDC towers to 220kV Bagalkote S/s- Drake ACSR			220kV Bagalkote Sub-Station	

5	KPC	50	Gadag	220kV SC line to Harthi Station-Drake ACSR			220kV Harthi Switching station	
6	NSL Sugars	200	Bagalkote	220kV Sc line on DC towers to 220kV Bagalkote S/s- Drake ACSR			220kV Bagalkote Sub Station	
7	SuZon	104	Rudragi	220kV Sc line on DC towers to 220kV Rudragi S/s- Drake ACSR			220kV Rudragi Sub-Station	
8	Hiriyur	100	Chitradurga	220kV Sc line on DC towers to 220kV Chitradurga S/s- Drake ACSR			220kV Chitradurga Sub-Station	
9	Hiriyur	100	Kadur	220kV Sc line on DC towers to 220kV Kadur S/s- Drake ACSR			220kV Kadur Sub-Station	
10	Vish Wind	178	Haveri	220kV Sc line on DC towers to 220kV Bidnal S/s- Drake ACSR			220kV Bidnal Sub Station	
11	Suzlon	110	Davangere	220kV Sc line on DC towers to 400kV Guttur S/s- Drake ACSR			400kV Guttur Sub-Station	
12	Albatech	20	Ranebennur	220kV Sc line on DC towers to 220kV Ranebennur S/s- Drake ACSR			220kV Ranebennur Sub Station	
	TOTAL	1342						

(D) Renewable Purchase Obligation (RPO) Quantum

Year	Min. quantum of purchase (in %) from RES (in terms of energy in kwh)			
	Wind	Solar	Biomass/WTE	Total
2011-12	4818	139		4961
2012-13	5274	145		5419
2013-14	5567	153		5720
2014-15	6154	169		6323
2015-16	7369	203		7572

Present RPO obligation : 7 % to 10% (other than Solar) (different for different DISCOMs)

Present RPO obligation : 0.25% for solar

K R E D L
PÀ£ÁðlPÀ £À«ÃPÀj¸À§°ÀÄzÁzÀ EAzsÀ£À
C©ü¹ÀÈ¢Þ ¤AiÀÄ«ÃvÀ
KARNATAKA RENEWABLE ENERGY DEVELOPMENT LIMITED
(A Government of Karnataka Enterprise)

No. KREDL/06/Pico Hydro-250/2010/ Date: 27-01-2012

To,

Shri. S.K.Bhatt
Director,(SHP)
Ministry of New & Renewable Energy,
Block No.14, CGO Complex,
Lodhi Road, New Delhi 110 003.

Sir,

Sub: Progress of Development/Upgradation of 250 Water Mills (Electrical output) in the state of Karnataka for the year 2010-11 - reg.

Ref: 1 MNRE ltr no. 16/133/2010-SHP Dated : 30-06-2010
2. MNRE ltr no. 16/137/ 2010 SHP Dated : 05-07-2011.

With reference to the above,the Ministry of New & Renewable Energy, New Delhi vide letter under reference (1), has sanctioned Rs. 3.00 Crore for installation of 250 Water Mills in Karnataka State for the financial year 2011-12 and released a sum of Rs. 1.375 Crore vide reference (2) towards the Subsidy amount to the beneficiaries those who installed Water Mills capacity up to 5 KW are eligible for lump sum subsidy of Rs. 1,10,000/- each.

The scheme was given a wide publicity and accordingly 253 beneficiaries have enrolled under the scheme. Out of enrolled beneficiaries, 125 beneficiaries have installed and availed subsidy of amount Rs.1,10,000/- each. In continuation to 125 beneficiaries another 34 beneficiaries have installed watermills and reported to KREDL with all the required documents for availing finance assistance from MNRE. These cases are pertaining to the districts as detailed below:

Sl.No	District	No. of Projects	Capacity installed in KW	Project Cost in Rs.	Subsidy Amount released in Rs.
1	Kodagu	82	83	12218947.00	9020000.00
2	Chikkamagalore	40	42	6186836.00	4400000.00
3	Dakshina Kannada	1	1	148350.00	110000.00
4	Uttara Kannada	1	1	149850.00	110000.00
5	Hassan	1	1	154250.00	110000.00
	Total	**125**	**128**	**18858233.00**	**13750000.00**

#39, "SAAw UAE°A", sAgAvÀ ¸ÉlmÀ CAqÀ UÉÊqÀ, aÃ¥ÀÀ ¥ÉÆÃ¥À¸ÀÄ ªÀiÁ¸ÀÄOgÀ eÉÉÃgÀ¯Á PÀbÉÃj JzÀAgÀA
CqÀªÀÄÄÉ gÀ¸ÉÛ, ¯ÉAUÀ¼ÀÄÆgÀÄ-560 001
39, "Shanthi Gruha" Branch Scouts & Guides Building, opp. to Chief Post Master General Office, Palace Road, Bangalore-560 001.
Tel: 22282272/07/08/09/22207851, Fax: 080-22257399.
Email: kredlnet@rediffmail.com, mukredlkar@gmail.com, Website: http://www.kredlnet.in

K R E D L
PÀ£Á¸ÍPÀ £À«ÃPÀj¸À§°ÀÄzÁzÀ EAzsÀ£À
C©Ü¹ÀÈ¢Þ ¤AiÀÄ«ÄvÀ
KARNATAKA RENEWABLE ENERGY DEVELOPMENT LIMITED
(A Government of Karnataka Enterprise)

The status of MNRE CFA available in KREDL is as below :

Sl.No	Particulars	Amount Received from MNRE in Rs.	Amount Utilised	Balance available
1	Amount Sanctioned from MNRE ltr no.16(137) 2010 SHP Dated : 05-07-2011	13750000=00	13750000=00	00-00
	Total	**13750000=00**	**13750000=00**	**00-00**

In view of closing the allotment for the financial year 2010-11, we request for release of balance amount of **Rs. 162.50 lakhs (Rupees One hundred sixty two lakhs and fifty thousand only)** towards the development / up gradation of remaining 125 Water Mills (Electrical output) in the state of Karnataka at the earliest.

Since the program is very popular and encouraging in the State, KREDL is receiving number of requests from aspirants who are interested in installing PICO Watermill and to avail CFA from MNRE .To meet the requirement of the applicants, it is hereby requested to allot **additional 200 numbers** of CFA to the State at the earliest

This is for your kind information and further needful.

Thanking you

Yours faithfully

Managing
Director

#39, "EAAw UAEºÁ", ¸sÁgÁvÀ ¸ÉÊvÀÍ ¢AzÀ UÉÊqÀ, aÃ¥sÁ ¥ÉÆÆÃ¸ÀÖ ºÀjÀ¸ÀÖgÀ ¤ÉÆÃgÀÄ PÀbÉÃj ¸ÀzÀÄgÀÄ
CgÁºÀÄÄ£É gÁ¸ÉÛ, ¨ÉÃUÀ¥ÀÄÉgÀÄ-560 001
39, "Shanthi Gruha" Bharath Scouts & Guides Building, opp. to Chief Post Master General Office, Palace Road, Bangalore-560 001
Tel: 22262202/22208109/22207851, Fax: 080-22257194.
Email: kredlnet@yahoo.co.in, mdkredl@gmail.com, Website: http://www.kredlresr.in

[illegible]

[illegible]	[illegible]	[illegible]	[illegible]	[illegible]	[illegible]	[illegible]	[illegible]
	[illegible]	[illegible]	[illegible]	[illegible]	[illegible]	[illegible]	[illegible]
2	[illegible]	[illegible]	[illegible]	[illegible]	[illegible]	[illegible]	[illegible]
3	[illegible]	[illegible]	[illegible]	[illegible]	[illegible]	[illegible]	[illegible]
4	[illegible]	[illegible]	[illegible]	[illegible]	[illegible]	[illegible]	[illegible]
5	[illegible]	[illegible]	[illegible]	[illegible]	[illegible]	[illegible]	[illegible]
6	[illegible]	[illegible]	[illegible]	[illegible]	[illegible]	[illegible]	[illegible]
7	[illegible]	[illegible]	[illegible]	[illegible]	[illegible]	[illegible]	[illegible]
8	[illegible]	[illegible]	[illegible]	[illegible]	[illegible]	[illegible]	[illegible]
9	[illegible]	[illegible]	[illegible]	[illegible]	[illegible]	[illegible]	[illegible]
10	[illegible]	[illegible]	[illegible]	[illegible]	[illegible]	[illegible]	[illegible]
11	[illegible]	[illegible]	[illegible]	[illegible]	[illegible]	[illegible]	[illegible]
12	[illegible]	[illegible]	[illegible]	[illegible]	[illegible]	[illegible]	[illegible]
13	[illegible]	[illegible]	[illegible]	[illegible]	[illegible]	[illegible]	[illegible]
14	[illegible]	[illegible]	[illegible]	[illegible]	[illegible]	[illegible]	[illegible]
15	[illegible]	[illegible]	[illegible]	[illegible]	[illegible]	[illegible]	[illegible]
16	[illegible]	[illegible]	[illegible]	[illegible]	[illegible]	[illegible]	[illegible]

[illegible]

Sl. No.	Name of the Developer	File No.	Location	MW	Village	Taluk	District	Date of Commissioning
1	[illegible]	[illegible]	[illegible]	[illegible]	[illegible]	[illegible]	[illegible]	[illegible]
2	[illegible]	[illegible]	[illegible]	[illegible]	[illegible]	[illegible]	[illegible]	[illegible]
3	[illegible]	[illegible]	[illegible]	[illegible]	[illegible]	[illegible]	[illegible]	[illegible]
4	[illegible]	[illegible]	[illegible]	[illegible]	[illegible]	[illegible]	[illegible]	[illegible]
5	[illegible]	[illegible]	[illegible]	[illegible]	[illegible]	[illegible]	[illegible]	[illegible]
6	[illegible]	[illegible]	[illegible]	[illegible]	[illegible]	[illegible]	[illegible]	[illegible]
7	[illegible]	[illegible]	[illegible]	[illegible]	[illegible]	[illegible]	[illegible]	[illegible]
8	[illegible]	[illegible]	[illegible]	[illegible]	[illegible]	[illegible]	[illegible]	[illegible]
9	[illegible]	[illegible]	[illegible]	[illegible]	[illegible]	[illegible]	[illegible]	[illegible]
10	[illegible]	[illegible]	[illegible]	[illegible]	[illegible]	[illegible]	[illegible]	[illegible]
11	[illegible]	[illegible]	[illegible]	[illegible]	[illegible]	[illegible]	[illegible]	[illegible]
12	[illegible]	[illegible]	[illegible]	[illegible]	[illegible]	[illegible]	[illegible]	[illegible]
13	[illegible]	[illegible]	[illegible]	[illegible]	[illegible]	[illegible]	[illegible]	[illegible]
14	[illegible]	[illegible]	[illegible]	[illegible]	[illegible]	[illegible]	[illegible]	[illegible]
15	[illegible]	[illegible]	[illegible]	[illegible]	[illegible]	[illegible]	[illegible]	[illegible]

[illegible]

CHECK LIST FOR COMMISSIONING 2014-2015

Sl. No.	Name of the developer	Location	MW	Village	Taluk	District	Probable year of Completion
1	[illegible]	[illegible]	11.000	[illegible]	[illegible]	[illegible]	2014-2015
2	[illegible]	[illegible]	4.00	[illegible]	[illegible]	[illegible]	2014-2015
3	[illegible]	[illegible]	1.500	[illegible]	[illegible]	[illegible]	2014-2015
4	[illegible]	[illegible]	12.000	[illegible]	[illegible]	[illegible]	2014-2015
5	[illegible]	[illegible]	1.000	[illegible]	[illegible]	[illegible]	2014-2015
6	[illegible]	[illegible]	2.000	[illegible]			2014-2015
7	[illegible]	[illegible]	1.250	[illegible]	[illegible]	[illegible]	2014-2015
8	[illegible]	[illegible]	1.000	[illegible]	[illegible]	[illegible]	2014-2015
9	[illegible]	[illegible]	9.100	[illegible]	[illegible]	[illegible]	2014-2015
10	[illegible]	[illegible]	10.000	[illegible]	[illegible]	[illegible]	2014-2015
11	[illegible]	[illegible]	7.750	[illegible]	[illegible]	[illegible]	2014-2015
12	[illegible]	[illegible]	15.000	[illegible]	[illegible]	[illegible]	2014-2015
13	[illegible]	[illegible]	20.000	[illegible]	[illegible]	[illegible]	2014-2015
14	[illegible]	[illegible]	2.000	[illegible]	[illegible]	[illegible]	2014-2015
15	[illegible]	[illegible]	1.500	[illegible]	[illegible]	[illegible]	2014-2015
16	[illegible]	[illegible]	10.000	[illegible]	[illegible]	[illegible]	2014-2015
17	[illegible]	[illegible]	5.000	[illegible]	[illegible]	[illegible]	2014-2015
18	[illegible]	[illegible]	6.000	[illegible]	[illegible]	[illegible]	2014-2015
19	[illegible]	[illegible]	5.000	[illegible]	[illegible]	[illegible]	2014-2015
20	[illegible]	[illegible]	2.000	[illegible]	[illegible]	[illegible]	2014-2015
21	[illegible]	[illegible]	37.500	[illegible]	[illegible]	[illegible]	2014-2015
22	[illegible]	[illegible]	2.000	[illegible]	[illegible]	[illegible]	2014-2015
23	[illegible]	[illegible]	6.000	[illegible]	[illegible]	[illegible]	2014-2015

152.800

Sl. No	Name of the developer	Location	MW	Village	Taluk	District	Proposed Commissioning Date
1	[illegible]	[illegible]	1.50	[illegible]	[illegible]	[illegible]	[illegible]
2	[illegible]	[illegible]	12.50	[illegible]	[illegible]	[illegible]	[illegible]
3	[illegible]	[illegible]	[illegible]	[illegible]	[illegible]	[illegible]	[illegible]
4	[illegible]	[illegible]	[illegible]	[illegible]	[illegible]	[illegible]	[illegible]
5	[illegible]	[illegible]	2.00	[illegible]	[illegible]	[illegible]	[illegible]
6	[illegible]	[illegible]	2.00	[illegible]	[illegible]	[illegible]	[illegible]
7	[illegible]	[illegible]	1.00	[illegible]	[illegible]	[illegible]	[illegible]
8	[illegible]	[illegible]	2.00	[illegible]	[illegible]	[illegible]	[illegible]
9	[illegible]	[illegible]	1.50	[illegible]	[illegible]	[illegible]	[illegible]
10	[illegible]	[illegible]	2.00	[illegible]	[illegible]	[illegible]	[illegible]
11	SD Hydro Power	[illegible]	[illegible]	[illegible]	[illegible]	[illegible]	[illegible]
12	[illegible]	[illegible]	9.16	[illegible]	[illegible]	[illegible]	[illegible]
13	[illegible]	[illegible]	1.00	[illegible]	[illegible]	[illegible]	[illegible]
14	[illegible]	[illegible]	[illegible]	[illegible]	[illegible]	[illegible]	[illegible]
15	[illegible]	[illegible]	4.00	[illegible]	[illegible]	[illegible]	[illegible]
16	[illegible]	[illegible]	2.00	[illegible]	[illegible]	[illegible]	[illegible]
17	[illegible]	[illegible]	[illegible]	[illegible]	[illegible]	[illegible]	[illegible]
18	[illegible]	[illegible]	[illegible]	[illegible]	[illegible]	[illegible]	[illegible]
19	[illegible]	[illegible]	[illegible]	[illegible]	[illegible]	[illegible]	[illegible]
20	[illegible]	[illegible]	0.50	[illegible]	[illegible]	[illegible]	[illegible]
21	[illegible]	[illegible]	[illegible]	[illegible]	[illegible]	[illegible]	[illegible]
22	[illegible]	[illegible]	[illegible]	[illegible]	[illegible]	[illegible]	[illegible]
23	[illegible]	[illegible]	[illegible]	[illegible]	[illegible]	[illegible]	[illegible]
24	[illegible]	[illegible]	[illegible]	[illegible]	[illegible]	[illegible]	[illegible]
25	[illegible]	[illegible]	[illegible]	[illegible]	[illegible]	[illegible]	[illegible]
26	[illegible]	[illegible]	9.00	[illegible]	[illegible]	[illegible]	[illegible]
27	[illegible]	[illegible]	[illegible]	[illegible]	[illegible]	[illegible]	[illegible]
28	[illegible]	[illegible]	[illegible]	[illegible]	[illegible]	[illegible]	[illegible]
29	[illegible]	[illegible]	2.00	[illegible]	[illegible]	[illegible]	[illegible]
30	[illegible]	[illegible]	2.00	[illegible]	[illegible]	[illegible]	[illegible]
31	[illegible]	[illegible]	[illegible]	[illegible]	[illegible]	[illegible]	[illegible]

Sl. No.	Name of the Developer	Location	MW	Village	Taluk	District	Probable year of Completion
[illegible]	[illegible]	[illegible]	2.00	[illegible]	[illegible]	[illegible]	[illegible]
[illegible]	[illegible]	[illegible]	[illegible]	[illegible]	[illegible]	[illegible]	[illegible]
[illegible]	[illegible]	[illegible]	3.00	[illegible]	[illegible]	[illegible]	[illegible]
[illegible]	[illegible]	[illegible]	3.00	[illegible]	[illegible]	[illegible]	[illegible]
[illegible]	[illegible]	[illegible]	1.96	[illegible]	[illegible]	[illegible]	[illegible]
[illegible]	[illegible]	[illegible]	1.00	[illegible]	[illegible]	[illegible]	[illegible]
[illegible]	[illegible]	[illegible]	[illegible]	[illegible]	[illegible]	[illegible]	[illegible]
[illegible]	[illegible]	[illegible]	24.75	[illegible]	[illegible]	[illegible]	[illegible]
[illegible]	[illegible]	[illegible]	2.00	[illegible]	[illegible]	[illegible]	[illegible]
[illegible]	[illegible]	[illegible]	5.00	[illegible]	[illegible]	[illegible]	[illegible]
[illegible]	[illegible]	[illegible]	4.00	[illegible]	[illegible]	[illegible]	[illegible]
[illegible]	[illegible]	[illegible]	1.25	[illegible]	[illegible]	[illegible]	[illegible]
[illegible]	[illegible]	[illegible]	4.00	[illegible]	[illegible]	[illegible]	[illegible]
[illegible]	[illegible]	[illegible]	4.00	[illegible]	[illegible]	[illegible]	[illegible]
			150 MW				

TWENTY LETTER COMMENCEMENT FIT 2016-2017

SL NO	Name of the developer	Location	MW	Village	Taluk	District	Est. Year
[illegible]	[illegible]	[illegible]	[illegible]	[illegible]	[illegible]	[illegible]	[illegible]
2	[illegible]	[illegible]	24.75	[illegible]	[illegible]	[illegible]	2015-2017
[illegible]	[illegible]	[illegible]	[illegible]	[illegible]	[illegible]	[illegible]	[illegible]
[illegible]	[illegible]	[illegible]	10.00	[illegible]	[illegible]	[illegible]	2015-2017
[illegible]	[illegible]	[illegible]	2.00	[illegible]	[illegible]	[illegible]	[illegible]
[illegible]	[illegible]	[illegible]	[illegible]	[illegible]	[illegible]	[illegible]	2016-2017
7	[illegible]	[illegible]	[illegible]	[illegible]	[illegible]	[illegible]	[illegible]
[illegible]	[illegible]	[illegible]	2.00	[illegible]	[illegible]	[illegible]	2016-2017
[illegible]	[illegible]	[illegible]	2.00	[illegible]	[illegible]	[illegible]	2016-2017
[illegible]	[illegible]	[illegible]	2.00	[illegible]	[illegible]	[illegible]	2016-2017
[illegible]	[illegible]	[illegible]	2.00	[illegible]	[illegible]	[illegible]	2016-2017
[illegible]	[illegible]	[illegible]	4.00	[illegible]	[illegible]	[illegible]	2016-2017
[illegible]	[illegible]	[illegible]	2.00	[illegible]	[illegible]	[illegible]	2016-2017
[illegible]	[illegible]	[illegible]	3.00	[illegible]	[illegible]	[illegible]	2016-2017
[illegible]	[illegible]	[illegible]	5.00	[illegible]	[illegible]	[illegible]	2016-2017
[illegible]	[illegible]	[illegible]	8.00	[illegible]	[illegible]	[illegible]	2016-2017
[illegible]	[illegible]	[illegible]	[illegible]	[illegible]	[illegible]	[illegible]	[illegible]
[illegible]	[illegible]	[illegible]	[illegible]	[illegible]	[illegible]	[illegible]	[illegible]

Total 145.30

PROJECTIONS OF WIND POWER PROJECTS FOR 2012-13

Sl No	Developer Name	Location/name of the site	Taluk	District	2012-13 (MW)	Probable date of commissioning
1	Leeco Wind Power Private Limited	Mallenahalli	Chikkamagaluru	Chikkamagaluru	4.00	31st March 2013
		Leeco Chikkanahalli	Belmaragadi	Chikkamagaluru	19.80	31st March 2013
2	Fico Developers and Investments (P) Limited	Chikkodi Eshwari	Chikkodi	Belgaum	13.00	31st March 2013
		Kondhanhally, Chikmagalur	Chikkamagaluru	Chikkamagaluru	13.00	31st March 2013
3	Vijayi Developers (P) Ltd	Belthadi, Gadag	Gadag	Gadag	20.00	31st December 2012
		Belthadi, Gadag	Gadag	Gadag	18.00	31st March 2013
4	NSPR Limited	Sindagi/Tavaravadi	Belgaum	Belgaum	15.00	31st March 2013
5	Enercon India Limited	Tadas	Ranebennur	Haveri	88	31st December 2012
		Kappadgudda wind farm II	Mundargi	Gadag	19.8	31st March 2013
6	Suzlon Infrastructure Limited	Nibbal Oodla, Kagavahalli, Siganahalli, Haglibapura	Hoskote	Tumkur	24.8	31st December 2012
	Suzlon Infrastructure Limited	Khandhagal, Virapura, Kademudiballi, Kamalapuram	Jagalur	Haveri	50	31st December 2012
	Suzlon Energy Limited	Hiriyur	Bellary	Bellary	40	31st December 2012
	Suzlon Solutions Limited	Kudure Kanave	Chitradurga	Chikkamagaluru	25	31st March 2013
	Reliance Infrastructure Services Limited	Harsh	Bijapur	Bijapur	50.3	30th September 2012
7	Karnataka Renewable Energy Development Ltd	Shirabadagi, Raybag taluk, Belgaum district	Raybag	Belgaum	6	31st March 2013
	Karnataka Renewable Energy Development Ltd	Sogi, Hiriyadaga, Kuru, Bellary district	Hiriyadaga	Bellary	6	31st March 2013
8	Vestas Wind Technology India (P) Limited	Uttur, Hadagali, Kaudi, Mangoli	Basavanbagevadi	Bijapura	21.6	31st December 2012
		Mandoli, Ingalgi, Kerur	Basavanbagevadi	Bijapura	12.0	31st December 2012
9	Bellary Wind Power (P) Limited	Sankalghatti	Harpanahalli	Davangere	06	31st December 2012
10	Mysore Mercantile	Kolali	Gokak	Belgaum	10	31st March 2013
	Mysore Mercantile	Soudatti	Soudatti	Belgaum	8	31st March 2013
	Mysore Mercantile	Chikkodi	Chikkodi	Belgaum	9.5	31st March 2013
11	Deccanwar Brothers	Tarapatti and Chikkodi	Chikkodi	Belgaum	30	31st March 2013
12	Anil Mahindra Textiles Limited	Tatiyur & Madhuvalkunthalli	Chitradurga	Chitradurga	1.2	31st December 2012
					626.00	

PROJECTIONS OF WIND POWER PROJECTS FOR 2013-14

Sl.No	Company Name	Location/name of the site	Taluk	District	Capacity in MW	Probable date of Commissioning
1	Lusso Wind Power Private Limited	Kudremukh	Chikkamagalur	Chikkamagalur	204.20	31st March 2014
2	Vijayi Developer (P) Ltd	Belhalli	Gadag	Gadag	30	30th September 2013
3	MSPL Limited	Shamani Thanda	Jewargi	Bagalkote	30.00	30th September 2013
4	Gurrey (P) Ltd	Bujaj H	Ranebennur	Haveri	29.2	31st March 2014
		Hanagunda	Ramdurga	Belgaum	77.8	31st March 2014
5	Sudan Infrastructure Limited	Mukaniwadi	Gangawati	Koppal	10	30th September 2013
		Kurgod, Sirigere	Sirugupp	Bellary	50	30th September 2013
6	Sujay Reality Limited	Jettinakatti, North RF, Dehangidurga, Gurida Mandhalli, Kombarenahalli Spine	Harapanahalli	Davangere	128	31st July 2013
		Nagayvana Durga	Jagalur	Davangere	11	31st July 2013
		Byadagi	Byadagi	Haveri	17	30th September 2013
7	Suzlon Energy Limited	Sadaru	Saudatti	Belgaum	11	30th September 2013
		Chalkoji	Chikkodi	Belgaum	32	30th September 2013
		Harchhatti	Chikkodi	Belgaum	11	30th September 2013
8	Chiranjeevi Wind Energy Ltd	Turuvanur & Mallanayakanahalli	Chitradurga	Chitradurga	12.8	31st December 2013
9	Chitradurga Wind Power (P) Limited	Harapanahalli	harpanahalli	Davangere	45	30th September 2013
10	Mitcon Renewable	Gadag	gadag	Gadag	2	30th September 2013
	Total				600.00	

PROJECTIONS OF WIND POWER PROJECTS FOR 2014-15

Sl No	Developer Name	Location name of the site	Taluk	District	2014-15	Probable date of commissioning
1	[illegible]	Arasanpura	Chitradurga	Chitradurga	5	31st Jan 2015
		Shimoga Kumbichi	Shimoga	Shimoga	15.00	31st Jan 2015
2	[illegible]	Jogimatti	Chitradurga	Chitradurga	19.95	30th September 2014
		[illegible]	[illegible]	Dharwad	21.00	30th September 2014
		Dharmasagar,Chitradurga	Chitradurga	Chitradurga	34.80	31st Jan 2015
3	[illegible]	[illegible]	[illegible]	[illegible]	[illegible]	[illegible]
4	[illegible]	[illegible]	Gadag	Gadag	5.10	30th April 2014
5	Bharata Power Corporation Ltd	Ponnanda	Ron	Gadag	12.75	30th April 2014
6	[illegible]	Anghmah,Hanagal,Yadahalli,Chinnewadi	Athani	Belgaum	5.00	30th September 2014
		Hanagi,Hage,Hosahalli,Ogalwadi,Sugar,[illegible]	Athani	Belgaum	3.00	30th September 2014
		Hallimod,Pala,Hosahalli,Gatihali	Belgaum	Belgaum	3.00	30th September 2014
		Sunpur,Konnad, Singanum, Hour, Dilaur, Chandanhali,	Belgaum	Belgaum	5.30	31st December 2014
		Hotgal,Amboli	Chikkodi	Belgaum	8.8	31st December 2014
		Gambunachanahali	chikkodi	Belgaum	8.5	31st March 2015
7	[illegible]	Saundatti & Ramdurga, Belgaum district	Saudatti	Belgaum	82	30th September 2014
		Saundatti & Ramdurga, Belgaum district	Saudatti	Belgaum		
		Harumanahalli, Belgaum district	Chikkodi	Belgaum	50.4	30th September 2014
		Tadas(Haveri)	Ranebennur	Haveri	11.9	31st March 2015
8	Sanjay Realtors Ltd	Gargeshwari,Shimoga	Shikaripura	Shimoga	25.75	31st December 2014
	Sudan Infrastructure Ltd	Belavagu	Gangavathi	Koppal	30.5	30th September 2014
	Sudan Infrastructure Ltd	Hiriyur	Bellary	SANDUR	17	31st August 2014
	Sanjay Realtors Ltd	[illegible]	[illegible]	Dharwad	4.9	30th April 2014
	Sanjay Realtors Ltd	Sidewuru	Gadag	Haveri	21	30th April 2014
	Sudan Infrastructure Ltd	Sidewuru	Gadag	Haveri	4	30th September 2014
	Sudan Energy Limited	Hunagalu	Bellary	BELLARY	31.25	30th September 2014
	Sanjay Realtors Ltd	Allingang Pyati South RF,Devagadugu,Gurumaranaru,Kadaramara Bilaru	Harpanahalli	Davangere	97	31st March 2015
	Sudan Infrastructure Ltd	Kankal,Bevinahal,Jalavar,Muddebihal	Muddebihal	Bijapur	40	30th April 2014
9	Suzlon Wind Technology India (P) Limited	Devagalli, Kalkeri, Rattihal	Hirekerur	Haveri	21.6	31st August 2014
		Total			700.00	

PROJECTIONS OF WIND POWER PROJECTS FOR 2015-16

Sl No	Develpoer Name	Location/name of the site	Taluk	District	2015-16
1	Lanco Wind Power (P) Limited	Dgnagatte	Changeri	Shimoga	6.00
		Gogga	Changeri	Shimoga	6.00
		Rayalpadu	Bagepalli	Kolar	6.50
2	Pan Developers and Inter-trade (P) Limited	Balenahalli,Chitradurga	Holalkere	Chitradurga	12.75
		Basavanabagevadi Tlase _ Bijapur	Basavanbagewadi	Bijapur	31.00
		Kasvanhalli	Holalkere	Chitradurga	9.00
	Abletech Electro Engineers (P) Limited	Ranebnnur	Rannebenur	Haveri	9.30
5	Bhoruka Power Corporation Ltd	Donitanda	Ron	Gadag	12.75
6	MSPL Limited	Chinchanakatti, Chiralippa, Konnuru		Belgaum	25.00
		Banekatti		Belgaum	15.00
		Basarikatti		Belgaum	5.00
7	Enercon India Limited	Murgod	Ramdurga	Belgaum	44.8
		Haveri Haralapura	Rannebennur	Haveri	112
8	Suzlon Energy Limited	Michen	Bellary	Bellary	10
		Jittinakatti North North RF,Uchangidurga,Gorusanenahalli,Rambatarahalli,Jittina	Harpanahalli	Davangere	92
		Kankal,Basarikat,Jalapur,Muddebiha	Muddebihal	Bijapur	10
		Hirenannapura	Kustagi	Koppal	59
		Narasapuru, Bellavalukoppa, Mallapura, Cholachuda (Hegalkote)	Jamkhandi	Bagalkot	50.4
		Badali (Belgaum)	Belgaum	Belgaum	25.2
		Nalabhanda, Bellary	Gangavathi	Bellary	75.3
		Gudaduru (Koppal)	Kustagi	Koppal	54
		Kustagi (Koppal)	Kustagi	Koppal	79
		Total			780.00

PROJECTIONS OF WIND POWER PROJECTS FOR 2016-17

Sl No	Developer Name	Location/name of the site	Taluk	District	2016-17
1	Suzlon Energy Limited	Mudagal (Bagalkot)	Mudal	Bagalkot	50.4
		Chilkamuki (Koppal)	Kustagi	Koppal	100.8
		Gudadur	Kustagi	Koppal	81.9
2	Shree Krishna Minerals	Yadwadi, Belur, Soundatti taluk, Belgaum district	Soundatti	Belgaum	5
3	Shah Agency	Nizalagundi, Govinahalli, Singalagere, Shimoga district	Chinnagiri	Shimoga	10
4	Chitradurga Wind Power (P) Limited	Jogimatti II	Chitradurga	Chitradurga	57
	Chitradurga Wind Power (P) Limited	Jogimatti III	Chitradurga	Chitradurga	57
5	Vestas Wind Technology India (P) Limited	Basapur, Raichur	Lingasur	Raichur	34.2
	Vestas Wind Technology India (P) Limited	Kallarahatti, Bamanhal Raichur	Lingasur	Raichur	23.4
	Vestas Wind Technology India (P) Limited	Mydlwaddiki, Amarapur, Hunsur, Raichur	Kustagi	Koppal	46.8
	Vestas Wind Technology India (P) Limited	Mudal Hundi, Puttegoudanahundi, Umaganahatti, Mysore	Mysore	mysore	8.25
	Vestas Wind Technology India (P) Limited	Anamagutpeta, Golappaka, Jaddimakalpalli, Santanurpalli, Kolar	chintamani	Kolar	26.4
	Vestas Wind Technology India (P) Limited	Gokak	Gokak	Belgaum	15
	Vestas Wind Technology India (P) Limited	Chinbal village	Gadag	Gadag	7
		Total			523.15

GUJARAT

Meeting with Principal Secretary (EPD), Govt. of Gujarat, GETCO/ GEDA on 01.02.12

Capacity Addition in 12th Plan in Gujarat

Sl.No.		By 31.03.12 (MW)	2012-13 (MW)	2013-14 (MW)	2014-15 (MW)	2015-16 (MW)	2016-17 (MW)	Total (MW)
1	WIND	2600	2633	300	1150	500	500	7683
2	SOLAR	600	350	350	300	300	100	2000

Note - 1000 MW Wind capacity addition in 2015-16 & 16-17 will be in Jamnagar/Bhatia, Jesdan/Amreli & Banaskntha Complex

GETCO

GUJARAT ENERGY TRANSMISSION CORPORATION LIMITED

Regd. Office: Sardar Patel Vidyut Bhavan, Race Course, VADODARA – 390 007
Telephone No. (0265) 2310583/84/85, Fax No. (0265) 2337918/2338164
Web site: www.getcogujarat.com Email: acerc.getco@gebmail.com / deesystem@gebmail.com

Ref No.: CE(Project)/System/566/ 9581 Date: 24-2-2012

To,
Shri Y. K. Sehgal,
Executive Director (Smart Grid),
Power Grid Corporation of India Limited,
"Saudamini", Plot No-2,
Sector – 29, Gurgaon, Haryana – 122 001.

Sub: Transmission scheme for integration of 500 MW solar power from Solar Park Phase-II in Dist. Banaskantha with GETCO grid.

Respected Sir,

This has reference to the discussions held during meeting held on 01.02.2012 in the presence of Hon'ble Principal Secretary (EPD), GoG at Gandhinagar.

As discussed in the meeting, please find hereunder the tentative transmission scheme for 500 MW (Sub-Park-1: 400 MW + Sub-Park-2: 70 MW + Sub-Park-3: 30 MW) Solar Park Phase-II:

- Creation of 400/220/66 KV GIS pooling station with 66/220 KV, 5 x 100 MVA & 220/400 KV, 2 x 315 MVA ICTs at Solar Park Phase-II in Sub-Park-1
- Interconnection of each solar power project with pooling station through 66 KV, 630 mm2 under ground (u/g) cable for Sub-Park-1
- 66 KV 2 x D/C Sub-Park-2 to Sub-Park-1 lines with ACSR Panther conductor (2 x 4 RKM)
- 66 KV D/C Sub-Park-3 to Sub-Park-2 line with ACSR Panther conductor (3 RKM)
- LILO of 400 KV D/C Mundra – Zerda line at Solar Park Phase-II pooling station (Twin Moose conductor – approx. 2 X 10 RKM)
- 400 KV D/C Solar Park Phase-II pooling station – Sankhari line (Twin Moose – approx. 65 RKM)
- LILO of both circuits of 220 KV D/C Deodar – Tharad line at Solar Park Phase-II pooling station (Zebra conductor – approx. 2 x 40 RKM)

The schematic diagram showing the tentative grid connectivity for Gujarat Solar Park Phase-II is attached herewith as Annexure-1.

This is submitted for information and further needful in the matter please.

Thanking you,

Yours faithfully,
For **Gujarat Energy Transmission Corporation Limited,**

(B. B. Chauhan)
Chief Engineer (Project)

Encl: As above

C:\WINDOWS\Desktop\Proposal\Desktop.doc

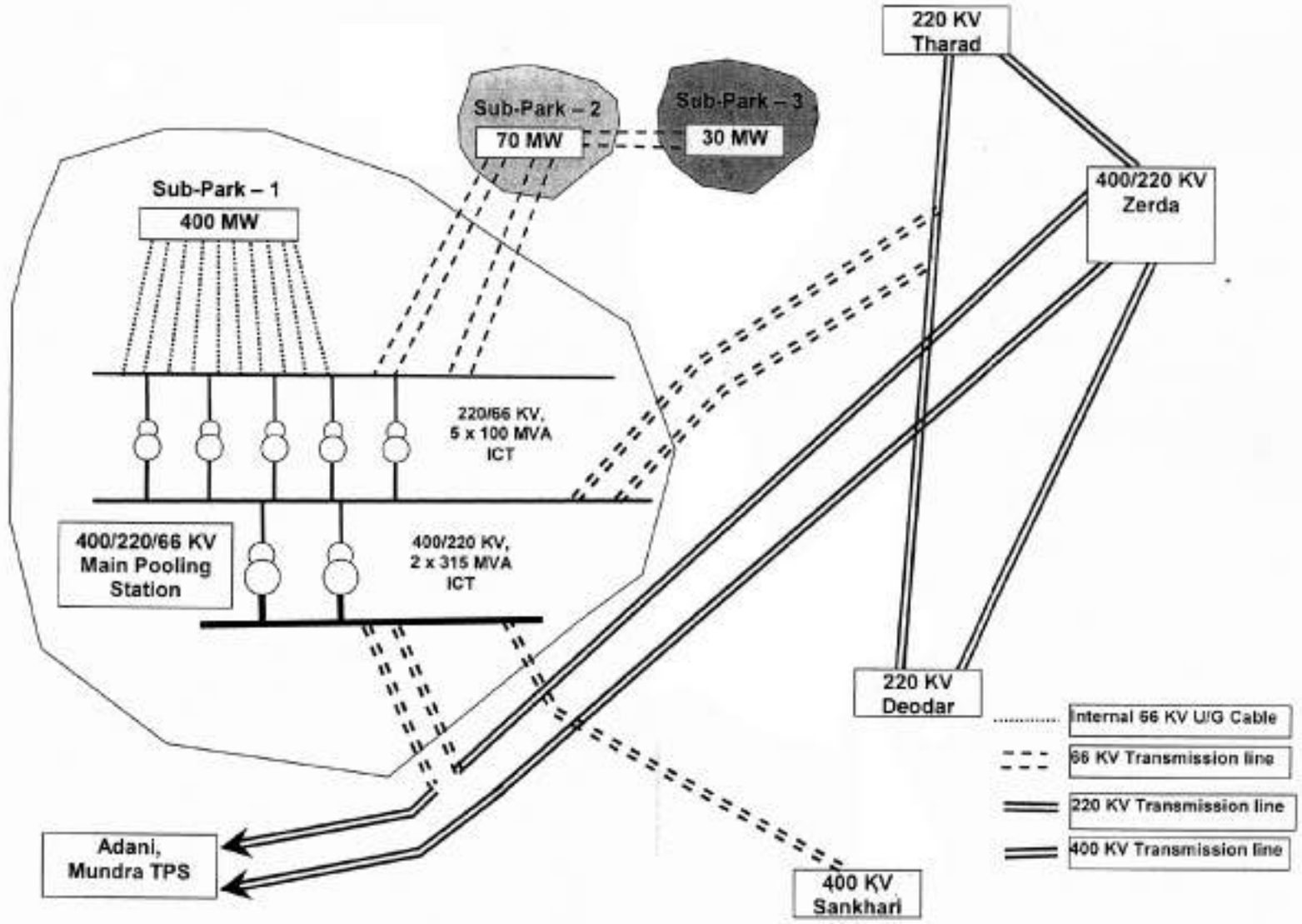

Tentative scheme for grid connectivity for 500 MW solar power from Solar Park Phase–2, Dist. Banaskantha

Data for Renewable Energy Resources and its Transmission Infrastructre

Name of the State Gujarat

(A) Existing RES

(i)

Total Installed Capacity (MW)	As on 30.11.2011
Wind	2466
Solar PV	90.2
Solar Thermal	0
Small Hydro	13
Biomass/Waste to Energy	21.2

(ii) **Availability**

	Injection (MW/kW)		Injection in Grid Peak/off peak hrs (MW/KW)	
	Maximum	Minimum	Peak	Off Peak
Wind	1711	0		
Solar PV	53.45	0		
Solar Thermal	0	0		
Small Hydro	13	0		
Biomass/Waste to Energy	19	0		

(iii) **Network Connectivity**

Type- Wind / Solar/SHP/Biomass/WTE) etc.

Area:

Sno	Developer	Approved Capacity (MW)	Installed Capacity (MW)-upto 31.10.2011	Location		Transmission Scheme (details like name of line (D/c or S/c), voltage level (kV), length, Conductor type etc.		Maximum Injection (MW)	Name of 220kV STU S/s for above injection	Tr. System beyond injection point
				Village	District	Immediate Evacuation	Associated Strengthening, if any			
1	M/s. Suzlon	300	270.8	Suthari	Kutch	(1) 220 KV Suthari WF S/S - Nanikhakhar D/C, AAAC Moose conductor, 80 RKM	(1) 220 KV WF S/S Suthari - WF S/S Sindhori S/C, AAAC Moose conductor, 14 RKM	225	220 KV Nanikhakhar	
2	M/s. Suzlon	300	299.1	Sindhori	Kutch	(1) 220 KV Sindhori WF S/S - Nanikhakhar D/C, AAAC Moose conductor, 80 RKM		225		
3	M/s. Suzlon	35	25	Changdai	Kutch	(1) 66 KV WF S/S - Sajath S/C, Dog conductor, 6 RKM		18.75	220 KV Nanikhakhar / Nakhatrana	
4	M/s. Suzlon	45	37.5	Layja	Kutch	(1) 66 KV WF S/S - Don D/C lines with Panther conductor, 15 RKM		33.75		
5	M/s. Suzlon	50	50	Vanko	Kutch	(1) 66 KV D/C WF S/S - Kothara with Dog Conductor, 13 RKM		37.5	220 KV Nakhatrana	
6	M/s. Suzlon	111	100.5	Jangi	Kutch	(1) 66 KV WF S/S - Samakhiali D/C, Panther conductor, 20 RKM		83.25	220 KV Shivlakha	
7	M/s. Vestas	85	66.7	Shikarpur	Kutch	(1) 132 KV WF S/S - Samakhiyali D/C, Panther conductor, 22 RKM		63.75		
8	M/s. Suzlon	56	55.5	Shikarpur	Kutch	(1) 66 KV WF S/S - Shivlakha D/C, Panther conductor, 13 RKM		42		
9	M/s. Vestas	76	75.6	Chandrodi	Kutch	(1) 66 KV WF S/S - Shivlakha D/C, Panther conductor, 12 RKM		57		
10	M/s. Veer	55	51.2	Chandrodi	Kutch	(1) 66 KV WF S/S - Shivlakha D/C, Panther conductor, 12 RKM		41.25		
11	M/s. Vestas	150	77.1	Vandhiya	Kutch	(1) 220 KV WF S/S - Shivlakha D/C, Zebra conductor, 25 RKM		112.5		
12	M/s. Suzlon	50	46	Bitavladiya	Kutch	(1) 66 KV WF S/S - Khedoi D/C lines, Panther conductor, 10 RKM		37.5	220 KV Anjar	
13	M/s. Suzlon	14	15.7	Patalka	Jamnagar	(1) 66 KV WF S/S - Kalyanpur S/C line, Dog conductor, 7.7 RKM		10.5	132 KV Bhatia	

14	H/s. Enercon	170	159.5	Damnasa	Jamnagar	(1) 132 KV WF S/S - Bhuva D/C, Panther conductor 8 RKM	(1) 132 KV D/F Bhuva Jamkandorna line, Panther conductor 12 RKM	127.5		
15	H/s. Suzlon	36	20.2	Navada	Jamnagar	(1) 66 KV WF S/S - Bhuva S/C line, Dog conductor, 30 RKM (2) 66 KV WF S/S - Lamba S/C line, Dog conductor, 7 RKM		27		
16	H/s. Suzlon	25	24.8	Bhogat	Jamnagar	(1) 66 KV WF S/S - Bhuva S/C line, Dog conductor, 15 RKM (2) 66 KV WF S/S - Lamba S/C line, Dog conductor, 11 RKM		18.75		
17	H/s. Suzlon	36	36	Lamba	Jamnagar	(1) 66 KV WF S/S - Bhuva S/C line, Dog conductor, 18 RKM		27		
18	H/s. Suzlon	21	21	Sondra	Jamnagar	(2) 66 KV WF S/S - Lamba S/C line, Dog conductor, 11 RKM		15.75		
19	H/s. GEDA	2	2	Dera	Jamnagar	(1) 132 KV Bhatia at 11 KV level		2.7		
20	H/s. Elecon	35	22.1	Mota Gunna	Jamnagar	(1) 66 KV WF S/S - Mota Gunna S/C line, Panther conductor, 5.5 RKM		16.75		
21	H/s. Suzlon	25	18.2	Bangaja	Jamnagar	(1) 66 KV WF S/S - Varvala D/C, Dog conductor, 12 RKM		11.75		
22	H/s. Enercon	465	454.2	Samana	Jamnagar	(1) 220 KV WF S/S - Motipanel D/C line, Zebra conductor, 21 RKM	(1) 220 KV Motipanel Sarangpur D/C line, Zebra conductor, 56 RKM	348.75	220 KV Motipanel @ 220 KV Sarangpur	
23	H/s. Enercon	23	20.7	Nanacar	Kalkot	66 KV WF S/S - Sarangpur S/C line, Dog conductor, 25 RKM		15.75	220 KV Sarangpur	
24	H/s. Enercon	35	31.5	Dhana	Kalkot	(1) 66 KV WF S/S-Sarangpur S/C, Dog conductor, 21.5 RKM (2) 66 KV WF S/S-Tarsara S/C, Dog conductor, 14.0 RKM		26.25	220 KV Sarangpur	
25	H/s. Suzlon	15	13.2	Unwa 2	Bhanagar	(1) 66 KV WF S/S - Warna S/C line, Dog conductor, 6 RKM		9.75	220 KV Varna	
26	H/s. Suzlon	15	5.9	Sanoda	Bhanagar	(1) 66 KV WF S/S - Tarsa S/C line, Dog conductor, 6 RKM		9.75	220 KV Sanosara	
27	H/s. Suzlon	70	32	Kuchri	Porbandar	(1) 66 KV WF S/S - Sidhra D/C line, Dog conductor, 5 RKM		27.5	220 KV Ranavav	
28	H/s. Suzlon	37	33	Adaspur	Porbandar	(1) 66 KV WF S/S - Chhaya D/C line, Dog conductor, 15 RKM		24.75	220 KV Ranavav	
29	H/s. Suzlon	110	119.7	Vanthalwad	Rajkot / Kutch	(1) 132 KV WF S/S - Wanvadi D/C line, Panther conductor, 63 RKM		57.5	132 KV Wankaner	
30	H/s. Suzlon	50	35.7	Bhogavad	Surendranagar	(1) 66 KV WF S/S - Wadwa D/C line, Panther conductor, 10 RKM		32.5	132 KV Wankaner	
31	H/s. Suzlon	25	25.9	Gorsar	Porbandar	(1) 66 KV WF S/S - Wadhwana D/C line, Dog conductor, 12 RKM		18.75	220 KV Keshod	
32	H/s. Suzlon	11	5.5	Bhanvad	Jamnagar	(1) 66 KV WF S/S - Lalpur D/C line, Dog conductor, 10 RKM		24.75	132 KV Dhrol	
33	H/s. Shriram EPC	40	5	Kanda	Amreli	(1) 66 KV WF S/S - Kanda P Da D/C line, Dog conductor, 8 RKM		10	132 KV Jasdan	
34	H/s. GPL	50	40	Dadhalya	Surendranagar	(1) 66 KV WF S/S - Jasdan-II (Dadhalya) D/C line, Panther conductor, 15 RKM		37.5	132 KV Jasdan	
35	H/s. Enercon	35	35.5	Nana Varvala	Jamnagar	(1) 66 KV WF S/S - Varvala D/C, Dog conductor, 8 RKM		26.25	132 KV Bhatia	
36	M/s. Aparna	80	5	Ishwar Arni Jamba	Rajkot	66 KV WF S/S - Jasdan D/F, Panther conductor, 12 RKM		60	132 KV Wankaner	
37	M/s. Suzlon	40	8.4	Fakirda	Rajkot	(1) 66 KV WF S/S - Mota Dedva D/C line, Panther conductor, 10 RKM		30	132 KV Jasdan	
38	M/s. Enercon	300	36	Tebrada	Jamnagar	(1) 220 KV WF S/S - Bjam (Rajkot) D/C line, AAAC Moose conductor, 50 RKM		225	220 KV Vijay (Rajkot)	
	Total (Existing Wind)	3679	2493.9					2271.76		

Type-Solar (PV)

Sno	Developer	Installed Capacity (MW) - upto 30.11.2011	Location		Transmission Scheme details like name of line (D/c or S/c), voltage level (kV), length, Conductor type etc.		Maximum Injection (MW)	Name of 220 kV STU S/s for above Injection	Tr. System beyond injection point
			Village	District	Immediate Evacuation	Associated Strengthening, if any			
1	Azure Power (Gujarat) Pvt. Ltd., Ahmedabad	5	Dhama	Surendranagar	(1) 66 KV Azure Gujarat - Dhama D/C, Dog conductor, 2 RKM	(1) Creation of 66 KV pooling station at Dhama, (2) 66 KV Dhama - Vadgam 2 x S/C lines, Panther conductor, 14 RKM (3) 66 KV Vadgam - Mandal S/C line, Panther conductor, 20 RKM	4	220 KV Viramgam	
2	Azure Power (Haryana) Pvt. Ltd., Haryana	10.2	Khadada	Saberkantha	(1) 66 KV D/C Azure Haryana - Bayal Dhakrol line (Dog - 4 Km)	(1) 66 KV S/C Punsari - Rupal line (Dog - 15 Km)	8.16	220 KV Dhamuna	
3	Lanco Infratech Ltd ,Hyderabad - Bhadrada, Patan	5	Bhadrada	Patan	(1) 66 KV D/C Lanco Solar Bhadrada - Bhadrada line (Dog - 0.3 Km)	(1) LILO of 66 KV S/C Radhanpur - Semi line at Bhadrada substation (Panther - 24 Km)	4	220 KV Radhanpur	
4	Lanco Infratech Ltd ,Hyderabad - Chandiyana, Patan	15	Chandiyana	Patan	(1) 66 KV D/C Lanco Solar Chandiyana - Bhadrada line (Dog - 4 Km)		12		
5	Precious Energy Services Pvt. Ltd., New Delhi	15	Gunthawada	Banaskantha	(1) 66 KV D/C Precious Energy - Dunawada line (Dog - 6 Km)	(1) 66 KV S/C Dunawada - Katra line (Dog - 10 Km)	12	132 KV Patan	
6	Solitaire Energies Pvt. Ltd., N. Delhi	15	Gunthawada	Banaskantha	(1) 66 KV D/C Solitaire Energies - Agarwada line (Dog - 6 Km)		12	132 KV Patan	
7	Welspun Urja India Ltd., Mumbai	15	Khirsara	Kutch	(1) 66 KV D/C Welspun Urja - Dudhai line (Dog - 6 Km)		12	220 KV Tappar	
8	Green Infra Solar Energy Limited	10	Mervadar	Rajkot	(1) 66 KV D/C Green Infra - Tanasura line (Dog - 6 Km)		8	220 KV Sardargadh	
	Total (Existing Solar)	***90.2***					***72.16***		

(B) Future- Potential Locations and Capacity

Wind	4918.1
Solar PV	853.5
Solar Thermal	45
Small Hydro	5
Biomass/Waste to Energy	100

(C) RES Capacity Addition Programme in 12th Plan

	2012-13	2013-14	2014-15	2015-16	2016-17
(i) Type					
Wind	600	600	600	600	600
Solar PV	853.5	300	300	300	300
Solar Thermal	45				
Small Hydro	5				
Biomass/Waste to Energy	20	20	20	20	20

(ii) Network Connectivity for above proposed Capacity addition, if any

Type- Wind / Solar/SHP/Biomass(WTE) etc.

Area-

Sno	Developer	Approved Capacity (kW/MW)	Location		Proposed Transmission Scheme (details like name of line (D/c or S/c), voltage level (kV), length, Conductor type etc..		Maximum Injection (kW/MW)	Name of 220 kV STU S/s for above injection	Tr. System beyond injection point	Year for availability of transmission
			Village	District	Immediate Evacuation	Associated Strengthening, if any				2012-13
1	M/s. Vestas	18	Bayath	Kutch	(1) 66 KV WF S/S - Bayath D/C lines, Dog conductor, 3 RKM		13.5	220 KV Nanikhakhar / Nakhatrana		2012-13
2	M/s. Enercon	50	Jedadar	Kutch	(1) 66 KV WF S/S - Nakhatrana D/C lines, Panther conductor		37.5	220 KV Nakhatrana		2012-13
3	M/s. Suzlon	300	Jamanwada	Kutch	(1) 220 KV Jamanwada WF S/S - Varsana D/C, AAAC Moose conductor, 106 RKM		225	400 KV Varsana	400 KV Varsana & Halvad substations 400 KV Mundra-Zerda, Varsana-Halvad & Halvad-Vadavi lines and 220 KV Varsana-Radhanpur line	2012-13
4	M/s. Suzlon	250	Nakhatrana	Kutch	(1) 220 KV Nakhatrana WF S/S - Varsana D/C, AAAC Moose conductor, 165 RKM		187.5	400 KV Varsana		2012-13
5	M/s. Enercon	750	Ravapar	Kutch	(1) 400 KV Ravapar WF S/S - Varsana D/C, Twin Moose conductor, 140 RKM		562.5	400 KV Varsana		2014-15
6	M/s. Vestas	150	Vandhya	Kutch	220 KV WF S/S - Halvad (400KV S/S) D/C, Zebra conductor, 125 RKM		112.5	400 KV Halvad	400 KV Halvad with 400 KV and 220 KV lines	2012-13
7	M/s. Kintech	200	Kanmer	Kutch	220 KV WF S/S - Halvad (400KV S/S) D/C, Zebra conductor		150	400 KV Halvad		2012-13
8	M/s. Theolia	100	Jasdan	Rajkot	(1) 132 KV WF S/S - Jasdan D/C line, Panther conductor		75	132 KV Jasdan	220 KV Jasdan with 220 KV Jasdan-Amreli line	2011-12
9	M/s. Azalea	70	Bhojaljri	Rajkot	(1) 66 KV WF S/S - Sardhar D/C, Panther conductor 16 RKM		52.5	132 KV Jasdan		2011-12
10	M/s. Azalea	200	Thara	Surendranagar	(1) 220 KV WF S/S - Chorania D/C line, Zebra conductor		150	400 KV Chorania		2012-13
11	M/s. Theolia	25	Kidi	Amreli	(1) 66 KV WF S/S - Khambhala D/C line, Dog conductor		18.75	132 KV Jasdan		2012-13
12	M/s. Theolia	25	Roymal	Bhavnagar	(1) 66 KV WF S/S - Gadhada D/C line, Dog conductor		18.75	220 KV Dhasa		2012-13
13	M/s. Theolia	25	Ratanpar	Surendranagar	(1) 66 KV WF S/S - Dungarpur D/C line, Dog conductor		18.75	220 KV Morbi		2012-13
14	M/s. Theolia	25	Gala	Jamnagar	(1) 66 KV WF S/S - Piparioda D/C line, Dog conductor		18.75	220 KV Jamnagar		2012-13
15	M/s. Azalea	40	Moriana	Jamnagar	(1) 66 KV WF S/S - Morvadi D/C line, Panther conductor		30	220 KV Jamnagar		2012-13
16	M/s. Cape	25	Sarpadar	Jamnagar	(1) 66 KV WF S/S - Modpar D/C line, Panther conductor		18.75	220 KV Jamnagar		2012-13
17	M/s. Elecon	25	Vinjalpur	Jamnagar	(1) 66 KV WF S/S - Bhadthar D/C line, Dog conductor, 10 RKM		18.75	132 KV Bhatia		2011-12
18	M/s. Suzlon	100	Bhanvad	Jamnagar	(1) 132 KV WF S/S - Bhomiyavadar D/C line, Panther conductor		75	132 KV Bhomiyavadar	220 KV Bhatia with 220 KV Bhatia-Kalavad-Kangasiyali line	2012-13
19	M/s. Suzlon	100	Dhank	Jamnagar	(1) 220 KV WF S/S - Bhatia D/C line, Panther conductor		75	220 KV Bhatia		2012-13
20	M/s. Enercon	50	Tebhada	Jamnagar	(1) 66 KV WF S/S - Sonvadia D/C line, Panther conductor		37.5	220 KV Motipanel		2012-13
21	M/s. GFL	200	Maliya	Rajkot	(1) 220 KV WF S/S - Tankara D/C line, Zebra conductor		150	220 KV Tankara	220 KV Tankara and associated lines	2014-15
22	M/s. Regen	40	Kagdadi	Rajkot	(1) 66 KV WF S/S - Kagdadi D/C line, Panther conductor		30	132 KV Wankaner		2012-13
23	M/s. ReGen	35	Khodasar	Surendranagar	(1) 66 KV WF S/S - Khareda D/C line, Panther conductor		26.25	220 KV Morbi		2012-13
24	M/s. ReGen	35	Khodasar	Surendranagar	(1) 66 KV WF S/S - Vejalpur D/C line, Panther conductor		26.25	220 KV Morbi		2012-13
25	M/s. Veer Energy	30	Kotiya	Bhavnagar	(1) 66 KV WF S/S - Tracach D/C line, Dog conductor		22.5	220 KV Sarangpur		2012-13
26	M/s. K.P. Energy	25	Virpur	Bhavnagar	(1) 66 KV WF S/S - Kadamgiri D/C line, Dog conductor		18.75	220 KV Otha (Mahuva)		2012-13
27	M/s. K.P. Energy	25	Miyani	Porbandar	(1) 66 KV WF S/S - Visavada D/C line, Dog conductor		18.75	220 KV Ranavav		2012-13
28	M/s. GFL	150	Savarkundla	Bhavnagar	(1) 220 KV WF S/S - Amreli D/C line, AAAC Moose conductor		112.5	400 KV Amreli		2013-14
29	M/s. GFL	150	Roymal	Amreli			112.5			2013-14
30	M/s. Suzlon	30	Nani Kundal	Bhavnagar	(1) 66 KV WF S/S - Chavand D/C line, Dog conductor		22.5	220 KV Dhasa		2012-13
31	M/s. Suzlon	25	Pipaliya	Surendranagar	(1) 66 KV WF S/S - Bhadla D/C line, Dog conductor		18.75	132 KV Jasdan		2011-12

32	M/s. Suzlon	50	Nani Vadal	Amreli	(1) 66 KV WF S/S - Vapadi D/C line, Panther conductor		37.5	220 KV Savarkundla		2012-13
33	M/s. Regen	40	Kuvadava	Rajkot	(1) 66 KV WF S/S - Kuvadava D/C line, Panther conductor		30	220 KV Ryava (Rajkot)		2012-13
34	M/s. Regen	40	Sindhavadar	Rajkot	(1) 66 KV WF S/S - Sindhavadar D/C line, Panther conductor		30	220 KV Gondal		2012-13
35	M/s. Regen	200	Shapur	Rajkot	(1) 220 KV WF S/S - Halvad (400 KV S/S) D/C line, Zebra conductor		150	400 KV Halvad	400 KV Halvad and associated lines	2014-15
36	M/s. Kinbech	300	Amapur	Patan	(1) 220 KV WF S/S - Tharad D/C line, AAAC Moose conductor		225	220 KV Tharad	220 KV D/C Deodar - Tharad - Tharvar line	2012-13
37	M/s. Kinbech	200	Kodacha	Patan	(1) 220 KV WF S/S - Radhanpur D/C line, Zebra conductor		150	220 KV Radhanpur		2012-13
38	M/s. Gamesa	200	Maliya	Rajkot	(1) 220 KV WF S/S - Sarla D/C line, Zebra conductor		150	220 KV Sarla		2012-13
	Total (Approved Wind)	4363					2327.35			

Sno	Developer	Installed Capacity (MW)	Location		Transmission Scheme (details like name of line (D/c or S/c), voltage level (kV), length, Conductor type etc.		Maximum Injection (MW)	Name of 220 kV STU S/s for above injection	Tr. System beyond injection point	
			Village	District	Immediate Evacuation	Associated Strengthening, if any				
1	ESP Urja Pvt Ltd	5	Dhama	Surendranagar	(1) 66 KV ESP Urja - Dhama D/C, Dog conductor, 1 RKM		4	220 KV Viramgam		As per PPA, COD is December, 2011. However all these capacity will be available for 2012-13 condition.
2	Millenium Synergy (Gujarat) Pvt Ltd	10	Dhama	Surendranagar	(1) 66 KV Millenium Synergy - Dhama D/C, Dog conductor, 3 RKM		8	220 KV Viramgam		
3	Euro Solar Pvt. Ltd., Mumbai	5	Shivlakha	Kutch	1. 66 KV pooling station near Shivlakha 2. 66 KV D/C pooling station - Shivlakha line (Panther - 6 KM) 3. 66 KV S/C pooling station - Shivlakha line (Panther - 6 KM) - 66 KV D/C each generating station - pooling station line (2 + 5 + 7 + 11 Km)	1. 220/66 KV, 1 x 100 MVA ICT (3rd) at 220 KV Shivlakha substation	4	220 KV Shivlakha		
4	Cargo Solar, Delhi (Solar Thermal)	35	Khanpur	Kutch			20			
5	Zebe Solar Gujarat Pvt. Ltd	10	Shivlakha	Kutch			8			
6	Solar Semiconductor (India) Pvt. Ltd	20	Khavda	Kutch			16			
7	PLG Power Ltd., Mumbai	20	Lolada	Patan	1. 66 KV D/C PLG Power - Sankheshwar line (Dog - 9.2 Km)	1. 66 KV S/C Sankheshwar - Majpur line (Dog - 20 Km)	16	220 KV Radhanpur		
8	Unity Power Pvt. Ltd., Mumbai	5	Khirsara	Kutch	(1) 66 KV D/C Unity Power - Dudhai line (Dog - 8 Km)		4	220 KV Tappar		
9	WAA Solar Pvt. Ltd., Mumbai	10	Tikar	Surendranagar	1. 66 KV D/C WAA Solar - Sarla line (Dog - 5 Km)		8	220 KV Dhrangadhra		
10	M/s. ACME Solar Technologies (Gujarat) Pvt. Ltd.	15	Vadgam	Khambhat	1. 66 KV D/C ACME - Undel line (Dog - 28 Km)		12	132 KV Undel		
11	Sunborne Energy Gujarat One Pvt Ltd	15	Kermanya	Kutch	1. 66 KV D/C Sunborne Energy - Shikra line (Dog - 16 Km)		12	220 KV Anjar		
12	Azonfield Solar (Gujarat) Pvt. Ltd.	11.5	Nayaka	Patan	1. 66 KV D/C Azonfield - Bhadrada line (Dog - 12 Km)		9.2	220 KV Radhanpur		
13	Sunkon Energy Pvt. Ltd., Surat	10	Ghanapur	Amreli	1. 66 KV D/C Sunkon Energy - Mota Barman line (Dog - 12 Km)		8	220 KV Savarkundla		
14	Adani Power Ltd., Ahmedabad	40	Bita	Kutch	1. 66 KV D/C Adani Power - Nidra line (Panther - 19 Km)	1. 66 KV S/C Nalliya - Ivdra line	32	220 KV Nakhatrana		
15	Moser Baer Energy & Development Ltd. New Delhi	15	Kerigadh	Porbandar	1. 66 KV D/C Moser Baer - Ranakandorana line (Dog - 12 Km)	1. 66 KV S/C Khageshri - Vanajakiya line	12	220 KV Ranavav		
16	PLG Photovoltaic	20	Dahisar	Deesa	1. 66 KV D/C PLG Power - Dahisar line (Dog - 1 Km)		16	220 KV Radhanpur		
17	CBC Solar Technologies Pvt Ltd	10	Manvadar	Junagadh	1. 66 KV D/C CBC Solar - Manvadar line (Dog - 2 Km)	1. 66 KV S/C Manvadar - Bardargadh line	8	220 KV Kandarpach		
18	Backbone Enterprises Limited	5	Shivlakha	Kutch	1. 66 KV D/C Backbone - Shivlakha pooling station line (Dog - 2 Km)		4	220 KV Shivlakha		
19	Integrated Coal Mining Limited	9	Pratapgadh	Kutch	1. 66 KV D/C Integrated Coal - Shivlakha pooling station line (Dog - 12 Km)		7.2	220 KV Shivlakha		
20	India Solar Ray Power Private Limited	10	Khavda	Kutch	1. 66 KV D/C India Solar - Khavada line (Dog - 3 Km)		8	220 KV Kukma		
21	Jaihind Projects Limited	5	Chandiyana	Patan	1. 66 KV D/C Jaihind - Bhadrada line (Dog - 3 Km)		4	220 KV Radhanpur		
22	Mono Steel (India) Ltd.	10	Una	Junagadh	1. 66 KV D/C Mono Steel - Kasariya line (Dog - 8 Km)		8	220 KV Dhokadava		

23	Gurion 3.0 Energies Limited	25	Surendranagar	Surendranagar	1 66 KV DC Gurion - Kanadpur line (Dog - 12 Km)			67	220 kV Dhangadhra
24	CH Energy Private Limited	10	Khagaswa	Junagadh	1 66 KV DC CH Energy - Khagaswa line (Dog - 14 Km)			6	220 kV Sardargadh
25	Gangeshwari Merchandise Private Limited	5	Mendpar	Junagadh	1 66 KV DC Gangeshwari - Mendpar line (Dog - 3 Km)			4	220 kV Sardargadh
26	Ganga Green Energy Private Limited	25	Mendpar	Junagadh	1 66 KV DC Ganga Green - Mendpar line (Dog - 2 Km)	66 KV S/C Mendpar - Kalu line		30	220 kV Sardargadh
27	Gujarat Mineral Development Corporation Limited	5	Ranchodpur	Kutch	1 66 KV DC GMDC Solar - GMDC line (Dog - 1 Km)			4	220 kV Panandhro (GMDC)
28	APCA Power Private Limited	5	Khagaswa	Junagadh	1 66 KV DC APCA Power - Khagaswa line (Dog - 12 Km)			4	220 kV Sardargadh
29	Tejas Infrastructure & Power Project Pvt. Ltd.	5	Rapar	Kutch	1 66 KV DC Tejas - Kanapadar line (Dog - 3 Km)			4	220 kV Tejas
30	Kamdhenu Industries and Exports Limited	10	Kasar	Vadodara	1 66 KV DC Kamdhenu - Kasar Road line (Dog - 5 Km)			6	220 kV Gotri-2 Vatthay
31	Renew Renewable Energy Pvt. Ltd.	20	Kavda	Porbandar	1 66 KV DC Renew - Kavda (Dog - 12 Km)			16	220 kV Kavda
32	Sand Land Real Estates Pvt Ltd	25	Chital	Sabarkantha	1 66 KV DC Sand Land - Chital line (Dog - 2 Km)			27	220 kV Chital (Gujarat)
33	TATA Renewable	25	Mithapur	Jamnagar	1 66 KV DC TATA - Mithapur line (Dog - 15 Km)	66 KV S/C Mithapur - Bhatia line (Dog - 15 Km)		27	132 kV Bhatia
34	Kotak Gujarat V Pvt. Limited	5	Shivlakha	Kutch	1 66 KV DC Kotak - Shivlakha solar park substation line (Dog - 2 Km)			4	
35	EMCO Limited	5	Dhama	Gandhinagar	1 66 KV DC EMCO - Dhama solar park substation line (Dog - 2 Km)			4	
36	Adani Infrapower Limited	5	Mendpar	Junagadh	1 66 KV DC Adani - Mendpar line (Dog - 13 Km)			4	
37	Gujarat Industries Power Company Limited	5	Mosar	Mehsana	1 66 KV DC GIPCL - Mosar line (Dog - 6 Km)			4	220 kV Kim
38	Green Infra Solar Energy Limited	10	Mendpar	Junagadh	1 66 KV DC Green Infra - Mendpar line (Dog - 1 Km)			8	
39	Vasai Energy Solar Private Limited	25	Dhama	Gandhinagar	1 66 KV DC Vasai Energy - Dhama solar park substation line (Dog - 1 Km)			22	
40	Adani Power Pvt Limited	5	Bhera	Hirmamagar	1 66 KV DC Adani Power - Bhera line (Dog - 8 Km)			4	220 kV Dhansura
41	Renew Power Pvt. Ltd. (RNSSM - Solar Thermal)	20	Mundra	Junagadh	1 66 KV DC Renew Power - Mundra line (Dog - 25 Km)			16	220 kV Sardargadh
42	Greenko WySolar (P) Ltd.	15	Location not released		66 KV DC line (Dog) - 15 Km	Evacuation and system strengthening schemes will be identified on Transmission Connectivity Grant Application		12	
43	V. WySolar (P) Ltd.	15	data		66 KV DC line (Dog) - 15 Km			12	
44	Tulsi Energy Ltd.	5			66 KV DC line (Dog) - 15 Km			3	
45	Anil Adhoi Developers Private Limited	5			66 KV DC line (Dog) - 15 Km			4	
46	Footprint Solar Pvt. Limited	25			66 KV DC line (Dog) - 15 Km			20	
47	Gujarat Power Power Limited	25			66 KV DC line (Dog) - 15 Km			22	
48	P J Power Park Energy Private Ltd	5			66 KV DC line (Dog) - 15 Km			4	
49	Vanrai Capital & Energy Limited	25			66 KV DC line (Dog) - 15 Km			20	
	Total (outside solar park)	1453						378.4	
1	Gujarat Power Corporation Limited	5	Charanka Solar Park Patan		1 66 KV 630 sq mm (HVI) Isolated from purchase connection to Charanka pooling station	220 KV switchyard with 220 KV DC Charanka - Jangal Line will be available by 2012-13		4	
2	Gujarat Green Energy Limited	5			2 66 KV DC Charanka power station - Santalpur Pathan - 18.5 km	Nuvoco 400 KV S/S at Santalpur will be available by 2012-14		3	
3	SRG Infrastructure Limited	10						8	
4	Shri Solar Power Private Limited	25			3 66 KV DC Charanka power station - Radhanesda Pathan - 40.5 km			20	
5	Sun Edison Energy India Private Limited	25			4 220 KV DC Charanka power station - Jangal line (ACSR conductor - 12 Km)			20	
6	GSPC Pipavav Power Company Ltd	5			5 400 KV DC Charanka power station - Sankhari line (Twin Moose - 100 Km)			4	
7	GVK Gujarat Solar Power Pvt. Ltd	25			6 400 KV Charanka pooling station with 400/220 kV 2 x 315 MVA ICTs and 220/66 kV 2 x 100 MVA ICTs and 400 kV 1 x 125			20	
8	Sunedison Tetrachem Power Limited	5						4	

[illegible]	[illegible]	[illegible]	
[illegible]	[illegible]	[illegible]	
[illegible]	[illegible]	[illegible]	
[illegible]	[illegible]	25	
[illegible]	[illegible]	25	
[illegible]	[illegible]	[illegible]	
[illegible]	[illegible]	[illegible]	
[illegible]	[illegible]	[illegible]	
[illegible]	[illegible]	[illegible]	
[illegible]	[illegible]	5	
	Total (inside solar park)	445	[illegible]
	Grand Total (Approved Solar)	890.8	[illegible]

(II) Renewable Purchase Obligation (RPO) Quantum

Year	Min. quantum of purchase (in %) from RES (in terms of energy in			
	Wind	Solar	Biomass/ [illegible]	Total
2011-12	[illegible]	[illegible]	[illegible]	[illegible]
2012-13	[illegible]	[illegible]	[illegible]	[illegible]
2013-14	[illegible]	[illegible]	[illegible]	[illegible]
2014-15	[illegible]	[illegible]	[illegible]	[illegible]
2015-16	[illegible]	[illegible]	[illegible]	[illegible]

[illegible]

1. [illegible]
2. [illegible]
3. [illegible]
4. [illegible]

MAHARASHTRA

PGN/GSPP-066/2012/631

Date: 09th February, 2012

To.
Power Grid Corporation of India Ltd,
'Saudamini' Plot No. 2, Sector - 29,
Gurgaon - 122 001.

Sub: Identification of Transmission Infrastructure for likely capacity addition of RE based power plants in 12th plan.

Ref. Your letter no C/SG/06/RES/02 dated 05th January 2012

Sir,

With reference to your letter on subject matter and subsequent meeting held in MNRE on 27th January 2012, we are enclosing the tentative project locations for Wind Power and Solar Power in Maharashtra

We hope this will fulfil your requirements

Thanking you,

Yours faithfully,

I/c General Manager (PG-II)

Encl: As above

MAHAGENCO

Maharashtra State Power Generation Co. Ltd.

Office of the Chief Engineer (C.P.), 'Prakashgad', 3rd floor, Plot No.G-9, Bandra (East), MUMBAI-400 051 Ph(P) 022- 26581525(O) 022- 26474211/26472131 Extn.2215
Fax No.022-26476519 E-mail cpmsb@mahagenco.in Website : www.mahagenco.in

Ref.No.CE/CP/Solar/MEDA/ 01607 Date: 1 FEB 2012

To,
The General Manager (PG-II)
Maharashtra Energy Development Agency (MEDA)
MHADA Commercial Complex, 2nd Floor,
Opp. Tridal Nagar, Yerwada,
PUNE-411 006

(Kind Attn : Mr.S.A.Patil)

Sub: Solar Energy project locations for transmission survey.

Ref: Your letter no. PGN/GSPP-001/2012/434 dated 30.01.12

Dear Sir,

This is with reference to your letter wherein it is requested to furnish the potential locations identified by Mahagenco for the proposed MW scale solar projects in the state. This is as per the directives of Ministry of New and Renewable Energy (MNRE) during the meeting called to discuss phase II of JNNSM at New Delhi to issue details to M/s Powergrid for undertaking necessary survey/investigation for transmission purpose.

The potential locations identified by the Mahagenco for the proposed solar projects are as follows:

Sr. No	Site Location	Proposed MW	Available Land in Hect.
1	Bellarshah (Land is in MSETCL custody)	40	62.12
2.	Gagankhed	100	203
3.	Yeotmal a) Lohara MIDC land	75	131
	b) Govt.land Mangaladevi Pimpari (East) Nawabpur Malkhed (Bu)	 25 25 25 25	 59.63 55.80 51.91 49.45
	c) Forest Land Mauza – Ner / Darwha		1000
4.	OSMANABAD a)Dhorala Tal. Kalamb b)MIDC, Kaudgaon I phase III Phase	 50 100 250	 87.54 173 406
5.	Bhadgaon Tal. Sakri, Dist. Dhule	40	66

6.	Chandrapur (in custody of Mahagenco)	150	350
7.	Shivajinagar, Sakri, Dist. Dhule		140Hec.(128/1 part) 260 Hec.(129/1part)

Submitted for needful. please

Thanking you,

Yours sincerely

Chief Engineer (CP)

Copy forwarded w.r. to:

1. M.D (Mahagenco)
2. Director (Finance), Mahagenco
3.. Director (Project), Mahagenco
4. E.D (CP)

Tentative Potential at Windy Sites declared by C-WET/MNRE in the State of Maharashtra

Sr. No.	Windy Site	Taluka	District	Potential (MW)	Potential Tapped (MW)
1	Alamprabhu Pathar	Hatkanangale	Kolhapur	150	00
2	Ambheri	Khatav	Satara	150	91.525
3	Aundhewadi	Sinnar	Nashik	150	52.400
4	Brahmanwel	Sakri	Dhule	600	545.800
5	Chakla	Nandurbar	Nandurbar	300	291.500
6	Chalkewadi	Satara	Satara	150	28.000
7	Dhalgaon	K' Mahankal	Sangli	300	277.500
8	Dongarwadi	Miraj	Sangli	150	00
9	Gawalwadi	Dindori	Nashik	150	00
10	Gudepanchgani	Shirala	Sangli	150	117.860
11	Kankora	A' bad	Aurangabad	150	00
12	Kas	Satara	Satara	150	16.500
13	Kavadya Dongar	Parner	A'nagar	150	64.500
14	Khandke	A'Nagar	A' nagar	150	108.000
15	Kolgaon	Shrigonda	A' nagar	150	00
16	Lonavala	Maval	Pune	150	00
17	ManderDeo	Wai	Satara	150	00
18	Matrewadi	Patan	Satara	150	56.550
19	Panchapatta	Akole	A' nagar	150	88.000
20	Pachagani	M'shwar	Satara	150	00
21	Raipur	Sakri	Dhule	150	00
22	Palsi	Patan	Satara	150	31.350
23	Sautada	Patoda	Beed	150	32.200
24	Takarmauli	Sakri	Dhule	150	00
25	Thoseghar	Satara	Satara	150	37.260
26	Vijaydurg	Deogad	Sindhudurg	150	1.500
27	Vankusawade	Patan	Satara	300	242.825
28	Varekarwadi	Satara	Satara	150	19.600
29	Vaspet	Jat	Sangli	150	00
30	Bhud	Khanapur	Sangli	150	86.850
31	Rohina	Chakur	Latur	150	00
32	Kosegavhan	Shrigonda	A'nagar	150	00
33	Mirkala	Gevrai	Beed	150	00
34	Devgad	Devgad	Sindhudurg	150	1.100
35	Bhendwade	Shahuwadi	Kolhapur	150	00
36	Peth Shivapur	Bhudargad	Kolhapur	150	00
37	Nenewadi	Sawantwadi	Sindhudurg	150	00
38	Kolde	Nandurbar	Nandurbar	150	00
39	Mhaismal	Khultabad	Aurangabad	150	00
40	Motha	Chikhaldara	Amrawati	150	2.000
			Total	**6900**	**2192.82**

Data for Renewable Energy Resources and its Transmission Infrastructre

Name of the State **MAHARASHTRA**

(A) **Existing RES** As on 31.10.2011

(i)

Total Installed Capacity (MW)	**3449**
Wind	2460
Solar PV	17
Solar Thermal	
Small Hydro	256
Biomass	155
Bagasse Co-generation	550
Waste to Energy	11

(ii) **Availability**

	Injection (MW/kW)		Injection in Grid Peak/off peak hrs (MW/KW)	
	Maximum	Minimum	Peak	Off Peak
Wind	depends upon PLF		depends upon PLF	
Solar PV				
Solar Thermal				
Small Hydro				
Biomass/Waste to Energy				

(This data may be available with MEDA)

(iii) **Network Connectivity**

Type- Wind / Solar/SHP/Biomass(WTE) etc.

Area-

Sr.no	Developer	Installed Capacity (KW/MW)	Location (Vill/Dist)	Transmission Scheme (details like name of line (D/c or S/c), voltage level (kV), length, Conductor type etc.		Maximum Injection (KW/MW)	Name of 220 kV STU S/s for above injection	Tr. System beyond injection point
		(MW)		Immediate Evacuation	Associated Strengthening, if any	Maximum 80 % of Installed Capacity.		
Wind Power Projects								
1	M/s. RRB Energy Ltd.	20	Ambhari, Tal-Khatav, Dist-Satara	1) 33 kV Feeder from Wind Farm to 132/33 kV Aundh S/s.		16	220 kV Lonand S/s	
2	M/s. Vestas Wind Technologies Pvt. Ltd.	30	Brahmanwel, Sakri, Dhule	1) 1 x 50 MVA, 132/33 kV TF at 132/33 kV Sakri S/s. 2) 33 kV D/C feeder from Wind Farm to 132/33 kV Sakri S/s.		24	220 kV Dhule S/s	
3		40	GuhePachgani, Shirala & Karad / Sangli & Satara	1) 1 x 25 MVA, 132/33 kV TF at 132/33 kV Shirala S/s. 2) 33 kV D/C feeder from Wind Farm to 132/33 kV Shirala S/s.		32	220 kV Peth S/s	
4		50	Rewangaon (Bhud), Vita, Sangli	1) Replacement of 1 x 25 MVA by 1 x 50 MVA, 220/33 kV TF at 220 kV Vita S/s. 2) 33 kV Feeders from Wind Farm to 220/33 kV Vita S/s. : 3 Nos		40	220 kV Vita S/s	

5	[illegible]	100	Anand Lass Project, Tal Nanjeshwar, Dist Pune	1) 3 x 50 MVA & 1 x 25 MVA 132/33 kV TF at Wind Farm S/s 2) LILO of 100 kV Kharpad - Talegaon DC line at Wind Farm S/s		50	220 kV Chinchwad S/s	
6	[illegible]	76	Chandeshwar Tal Karjagan, Dist Satara	1) 3 x 50 MVA 132/33 kV TF at Wind Farm S/s at Chandeshwar 2) LILO of 132kV Lonand - Wai at Wind Farm S/s		50.4	220 kV Lonand S/s	
7		50.4	Bhambarwadi Sangli	1) 1 x 50 MVA 132/33 kV TF at 132/33 kV Wind Farm S/s at Bhambarwadi 2) LILO of 132 kV Warna - Kale SC line at Bhambarwadi S/s		40.32	220 kV Kasegaon S/s	
8		100	Khandke Ahmednagar	1) 2 x 50 MVA 132/33 kV TF at 132/33 kV Wind Farm S/s at Khandke 2) LILO of 132 kV Ahmednagar - Pathardi SC line at Khandke S/s		66.4	220/132 kV Ahmednagar S/s	
9		97	Panchkatla, Hadpsar	1) 2 x 50 MVA 132/33 kV TF at 132/33 kV Wind Farm S/s at Panchkatla 2) LILO of 132 kV Ekthane - Hadpsar SC line at Panchkatla S/s		77.6	220/132 kV Hadpsar S/s	
10		12	Thosegar Satara	1) 33 kV Feeder from Wind Farm to MSETCL's 110/33 kV Satara MIDC S/s - 1 No		9.6	220 kV Satara MIDC S/s	
11	M/s. Energy India Pvt. Ltd.	6	Nyegaon Satara	1) 33 kV Feeder from Wind Farm to MSETCL's 110/33 kV Koti S/s - 1 No		4.8	220 kV Satara MIDC & 220 kV Koti S/s	
12		12	Sivsenwadi, Satara	1) 33 kV Feeder from Wind Farm to MSETCL's 110/33 kV Satara MIDC S/s - 1 No		9.6	220 kV Satara MIDC S/s	
13		12	Vaneshwadi, Satara	1) 33 kV Feeder from Wind Farm to MSETCL's 110/33 kV Satara MIDC S/s - 1 No		9.6	220 kV Satara MIDC S/s	
14		8.4	Dhegaon, Sangli	1) 33 kV Feeder from Wind Farm to MSETCL's 110/33 kV Kale S/s - 1 No		6.72	220 kV Satara MIDC & 220 kV Kasegaon S/s	
15	M/s. Sri Manjunatha Wind Park Developers	40	Bhoj, Solapur	1) Replacement of 1 x 7.5 MVA by 1 x 50 MVA 132/33 kV TF at 132 kV Mayni S/s 2) 33 kV Feeders from Wind Farm to 132/33 kV Mayni S/s - 3 Nos		16	220 kV Karmala & 220 kV Pandharpur S/s	
16		25				20		
17		25				20		
18		5				4		
19		10	Ambani, Solapur	1) 33 kV Feeder from Wind Farm to 132/33 kV Betane Road S/s		8	220 kV Sangola MIDC S/s	
20	M/s. T.S. Wind Power Developers Pvt. Ltd.	25	Ambani Tal Malshiras, Dist Solapur	1) 1 x 25 MVA, 132/33 kV TF at 132/33 kV Aurad S/s 2) 25 kV DC feeder from Wind Farm to 132/33 kV Aurad S/s	1) Laying of 132 kV Dahiwadi - Aurad Line	20	220 kV Lonand S/s	
21		231	Dhegaon Sangli	1) 3 x 100 MVA, 220/33 kV TF at Wind Farm S/s at Dhegaon 2) 220 kV DC line from Wind Farm S/s to Vita S/s		184.8	220 kV Vita S/s	

22	M/s Suzlon Energy Ltd	50	Chada Kanoorwar	1) 33 kV DCC Line from Wind Farm to 132/33 kV Nandedwar S/s		40	220 kV Chada S/s & 400/220 kV Dhule S/s	
23		255	Chada, Kanoorwar	1) 1 x 100 MVA, 220/33 kV TF at Wind Farm S/s at Gangapur 2) LILO on 220 kV Malegaon - Satana SCDC Line	1) Ind dtr. wiring of 220 kV Malegaon - Satana SCDC line	254	220 kV Malegaon & 220 kV Satana S/s	
24		330	Borwaghat Dhule	1) 4 x 100 MVA, 220/33 kV TF at Wind Farm S/s at Jamde 2) 220 kV DCC line from Jamde to MSETCL's Dondaicha S/s		264	220 kV Dondaicha & 400/220 kV Dhule S/s	
25		170	Gadhmalwal Dhule	1) 2 x 100 MVA, 220/33 kV TF at Wind Farm S/s at Valve 2) 220 kV SCDC Line from Valve to Jamde & to Gangapur	1) Ind dtr. wiring of 220 kV Gangapur - Valve SCDC Line	125	220 kV Dondaicha & 400/220 kV Dhule S/s	
26	M/s Suzlon Energy Ltd	100	Vankuswade Satana	1) 3 x 50 MVA, 220/33 kV TF at Wind Farm S/s at Vankuswade 2) 220 kV DC Line from Vankuswade - Mahapatli S/s		120	220 kV Vankuswade S/s	
27		110	Sadwaghasur Satana	1) 3 x 100 MVA, 220/33 kV TF at Wind Farm S/s at Sadwaghasur 2) 220 kV DC Line from Sadwaghasur to 400/220 kV Kanad		105	220 kV Kanad	
28		170	Gadhe Pangan Satana	1) 2 x 100 MVA, 220/33 kV TF at Wind Farm S/s at Nigde 2) LILO of 220 kV Kanad - Kohaldara DCSS at Nigde S/s		135	400/220 kV Kanad & 400/220 kV Kohaldara S/s	
29		50	Khapriale Nasik	1) 2 x 50 MVA, 132/33 kV TF at Wind Farm S/s at Khapriale 2) 132 kV SCDC line from Khapriale to Sinnar S/s		40	132 kV Sinnar S/s	
	Total	2550				1663		

Chandrapur Bagasse/Solid Fuel Hydro Power Projects

30	M/s Lokmangal Sugar Energies Co Generation Industries Ltd 33/A, Sanjeevan Nagar, Hotgi Road, Solapur - 413003	1 X 15 MW	Bhandarwadi Tal. South Solapur Dist. Solapur	132 kV line from generation upto 132 kV Mandrup S/S		15 MW	220 kV Bale	
31	M/s M/s Hotel Leelaventure Ltd The Leela Hemanshu Sahar, Andheri (E), Mumbai 400 059	6 MW	Village Khapriale, Tal Sinnar dist. Nasik	33 kV line from generation Khapriale upto MSETCL 132/33 kV Khapriale S/S		4.5 MW	132 kV Sinnar	
32	M/s Hotel TU the Mauritia Nariman Point Dist. Office Sahar Airport Road Mumbai - 400 099	6 MW	Village Khapriale (Sinnar) Dist. Nasik	33 kV line from generation Khapriale Sinnar upto MSETCL 132/33 kV Khapriale S/S		6 MW	220 kV Sinnar	
33	M/s Renuka Sugars Ltd at Deshpanya Nagar Kumbhar Panchayatanga Sakharwadi Sakhar Karkhana, Ganga Nagar, Chikkodi	7 X 30 MW	Ganga Nagar, Dist Chikkodi	LILO on 110 kV Kohapur II - Khalapur Line		30 MW	220 kV Kohapur S/S	
34	M/s Bharat Sugar Ltd ICC Trade Tower, B Wing 2nd Floor, Senapati Bapat Road, Pune-411 016	18 MW	Village Alegaon Tal. Dauna Dist. Pune	LILO on 132 kV Daund - Shirgaonda Line		18 MW	220 kV Daund S/S	

35	M/s Gangakhed Sugar and Energy Pvt. Ltd. C/O Sunil Hitech Engineers Ltd 97, East High Court Road Ramdaspeth	1 X 30 MW	Gangakhed, Dist Parbhani	132 kV D/C line from tree Plant to 132 kV Gangakhed S/S		30 MW	220 kV Parbhani S/S	
36	M/s Bhaskar Agro Ltd. Pimpli, Baramati, Dist. Pune. Maharashtra - 413 102	22 MW	N.Pimpli, Ta. Baramati, Dist Pune	220 kV lines from tree plant to 220 kV Bhigwan S/S		22 MW	220 kV Bhigwan S/S	
37	M/s Kranti Sahakari Sakhar Karkhana, Kurdi, Tal. Pathri, Dist-Sangli-416 309.	6.65 MW(8.65 MW)	Kurdu, Tal Pathri, Dist Sangli	33 kV lines from tree plant to 132/33 kV Kurdi S/S		6.65 MW	220 kV Vita S/S	
38	M/s Tatadru Power Private Limited, Khandalgaon S.T. road Vaishnav Road, Karad (Tatadru), Tal Karad, Dist Satara	3 X 1.5 MW	Khandgaon Tal Karad Dist Satara	110 kV D/C lines from new plant to 110 kV Tambhu S/S.		4.5 MW	220 kV Kolhapur S/S	
39	M/s Yashwantrao Mohite Krishna Sahakari Sakhar Karkhana Ltd. Rethare Budruk, Tal Karad Dist Satara P.P Shivajinagar -415 108	15 MW	Rethare Bk., P.O Shivajinagar, Tal Karad, Dist Satara	110 kV lines from tree plant to 110 kV Rethare S/S		15 MW	220 kV Karad I S/S	
40	M/s A.A. Energy Ltd. 101, Nagina Tower, Central Bazar Road Ramdaspeth, Nagpur-440 010	10 MW	Sh. No. 124, Mauza Wadsa, Desaiganj, Dist Gadchiroli	132 kV line from tree plant to 132 kV Bramhapuri S/S		10 MW	220 kV Bramhapuri S/S	
41	M/s Shriram Jawahar Shetkari Sahakari Sakhar Udyog, Phaltan, Tal Phaltan Dist Satara	1.5 MW (11.5 MW)	Phaltan, Tal Satara	33 kV lines from tree plant to 132/33 kV Phaltan S/S		1.5 MW	220 kV Vita S/S	
42	M/s Someshwar Sahakari Sakhar Karkhana Ltd Someshwarnagar, Tal Baramati, Dist Pune-413 306	18 MW	At Someshwarnagar, Tal Baramati Dist Pune	132 kV line from tree plant upto 132 kV Someshwarnagar S/S		18 MW	220 kV Nimbagar S/S	
43	M/s Manas Hydro Power Projects Pvt Ltd 22-13, Shivajinagar Road Behind S.T Workshop Pune	4 MW	Somwade (Thandli) Tal Satara Dist Sangli	From tree plant at Somwade upto 110 kV Wane S/S		4 MW	220 kV Karad I S/S	
44	M/s Shree Vrangana Steels Pvt. Ltd. 125-126 1st Floor Shreen Tower Kingsway Sadar, near GPO office, Nagpur 440001	22 MW(30 MW)	40 Mauja Umarwada Village Atik Umar Road, Nagpur	220 kV Lines from tree plant to 220 kV Umred S/S		22 MW	220 kV Umred S/S	
45	M/s RPL UR-3A (Division of Repoya Projects Ltd) Village Kalmane, Tal Wani, Dist Yavatmal	8 MW (10 MW)	Village Kalmane, Tal Wani, Dist Yavatmal	33kV Lines from tree plant to 220/33 kV Wani S/S		8 MW	220/33 kV Wani S/S	
46	M/s Vidyaprakash Power Ltd. 12-2-450/Plot No 2, New Hyderabad, Gudimalkapur Mandal Rajendranagar, Hyderabad-500 028	10MW(12 MW)	N Village Nanej Dist Gadchiroli	132 kV line from tree plant to 220/132 kV Gadchiroli S/S		10MW	220/132 kV Gadchiroli S/S	
47	M/s Jain Tech Garment Ltd Ambur Sanandwana, Tal Korpana, Dist Chandrapur	12 MW 2 X 25 MW	Ambur, Ta. Korpana Dist Chandrapur	220 kV line from tree Plant at Ambur upto 220 kV Gadchandur S/S		12 MW 2 X 25 MW	220 kV Gadchandur S/S	
48	M/s Mahapose Sahakari Sakhar Karkhana Ltd. At Post Shirapnagar, Ta. Baramati, Dist Pune	14MW(21 MW)	Village Shirapnagar, Tal Baramati, Dist Pune	DLC from 132 kV Baramati-Phaltan line upto tree plant		14MW	220 kV Indapur S/S	

49	M/s Tata Power of India Order Fulfilment & Procurement Dept. Corporate Centre, 4th Floor Sona Bara Shikar, Malaria Gaon Road, Hamraj Point, Mumbai - 400 052	1.5 MW	At Belwadi Chakala Dist Nanderbar	33 kV line from their plant to 220/33 kV Gangapur S/S		1.5 MW	220/33 kV Gangapur S/S	
50	M/s Hemana Technologies Ltd. Gat No 10, Rajgoli (Khi) Tal Chandgad Dist Kolhapur	30 MW	Rajgoli (Khi) Tal Chandgad Dist Kolhapur	220 kV lines from their plant to 220/33 kV Hakeri S/S		30 MW	220/33 kV Hakeri S/S	
51	M/s Sahanath Sugar Mills Pvt. Ltd. At Time, Dist Solapur	12 MW	At Time, Dist Solapur	33 kV Lines from their plant to 132 kV Degaon S/S		12 MW	220 kV Ram S/S	
52	M/s Samarth Sahakari Sakhar Karkhana Ltd, Post. Ambulshwaga, Tal. Ambad, Dist. Jalna	18 MW	At Ambulshwaga, Tal Ambad	132 kV lines from Plant to 132 kV Wakulani S/S		18 MW	220 kV Jalna S/S	
53	M/s R.P. Power Trade Ltd. R.S. 347 Ambugadi Phata, Off NH-4, P.O. Wadgaon, Tal. Hatkanangle, Dist. Kolhapur	10 MW	At Radhanagari Dam Dist Kolhapur	33 kV level of MSEDCL existing 110/33 kV Radhanagari S/S		10 MW	220 kV Kurduwadi S/S	
54	M/s Bhagyaban Patalganga Project, Village Lohop, Patalganga, Tal Khalapur Dist Raigad	2 X 15 MW	Patalganga Dist Raigad	400 kV D/C line from Lonaje to Patalganga S/S		30 MW	220 kV Kamothe	
55	M/s Pennar India Holdings Pvt. Ltd. L-6 Sadhna Marg, Malaviya Nagar Jaipur Number 400 074	1.65 MW	At Sadwagrahar Dist Satara	33 kV line from their plant to 220/33 kV Satwagrahar S/S		1.65 MW	220/33 kV Satwagrahar S/S	
56	M/s Sonkas Sahakari Sakhar Karkhana Ltd. At Mohanrao Kadamnagar, Wang Tal. Kadegaon Dist. Sangli	22 MW	At Mohanrao Kadam Nagar Wang Tal Kadegaon Dist Sangli	132 kV lines from their plant to 220/132 kV Kadegaon S/S		22 MW	220/132 kV Kadegaon S/S	
57	M/s Pune Sahakari Sakhar Karkhana Ltd At Baramatinagar Dist Hingoli	18 MW	At Baramatinagar Dist Hingoli	132 kV lines from their plant to 132 kV Baramatinagar S/S		18 MW	220 kV Hingoli S/S	
Solar Power Projects								
58	MAHAGENCO	2	Chandrapur STPS, Dist. Chandrapur	33 kV Feeder from Solar Plant to 220/33 kV Tadali S/s		220 kV Tadali S/s		
59	M/s. Videocon Industries Ltd.	5	Tarsa Tal Warora Dist Chandrapur	33 kV Feeder from Solar Plant to 220/33 kV Warora S/s		220 kV Warora S/s		
60	M/s. Clover Solar Pvt. Ltd.	3	Supa, Tal Baramati, Dist. Pune	33 kV Feeder from Solar Plant to 132/33 kV Jejuri S/s		220 kV Kamthadi S/S		

(B) Future- Potential Locations and Capacity

Wind	
Solar PV	
Solar Thermal	
Small Hydro	
Biomass/Waste to Energy	

Note: Data may be available with MEDA

(C) RES Capacity Addition Programme in 12th Plan

(i)

Type	2012-13	2013-14	2014-15	2015-16	2016-17	Total (MW)
Wind (in MW)	300	300	300	300	300	**1500**
Solar PV(in MW) Solar Thermal (in MW)	125	100	100	100	100	**525**
Small Hydro (in MW)	10	10	10	10	10	**50**
Bagasse Co-generation (in MW)	50	50	50	50	50	**250**
Biomass (in MW)	30	30	30	30	30	**150**
Waste to energy (in MW)	3	3	3	3	3	**15**
TOTAL (in MW)	518	493	493	493	493	

(Source: MEDA website)

(ii) **Network Connectivity for above proposed Capacity addition, if any**

Type- Wind / Solar/SHP/Biomass/WTE) etc.

Area-

Sno	Developer	Installed Capacity (kW/MW)	Location (Vill/Dist)	Proposed Transmission Scheme (details like name of line (D/c or S/c), voltage level(kV), length, Conductor type etc.		Maximum Injection (kW/MW)	Name of 220kV STU S/s for above Injection	Tr. System beyond injection point
		(MW)		Immediate Evacuation	Associated Strengthening, if any	Maximum 80 % of Installed Capacity.		
1	Vestas Wind Technology Pvt. Ltd	175	Bothe, Man & Khatavi Satara	1) 2 X 100 MVA, 220/33 kV TF at Wind Farm S/s. Bothe. 2) 220 kV D/C line from Bothe to Loand s/s	220 kV Lonand MIDC S/s.	140	220 kV Lonand S/s	
2		100	Gangadevi, Ashti Beed	1) 2 X 50 MVA, 132/33 kV TF at Wind Farm S/s. at Gangadevi 2) 132 kV D/C line from Gangadevi to Pathrdi S/s.	1) RECONDUCTORING OF EXISTING 132KV RAMOHA TO PATHARDI LINE - 38KM 2) SECOND CIRCUIT STRINGING OF 132 KVSHEVGAON-PATHARDI SCDC LINE- 23 KMS	80	220/132 kV Ahmednagar S/s	

3		25	Andhra Lake Project, Tal Mawal/Wed, Dist Pune	1) 1 x 25 MVA 132-132/33 kV TF at 132-100 kV Wind Farm S/s at Andhra Lake 2) LILO of 100 kV Talegaon - Koppoli SC Line	1) Renovation of 100 kV Talegaon - Khopoli DC line with 0.2 ACSR Panther Conductor	25	220 kV Chinchwad S/s	
4		32	Dongarwadi, Tal Kavthemahankal Dist Sangli	02 nos of 33 kV Bays at MSETCL's existing Kavthemahankal SS & 33 kV DCDH line from Wind project to MSETCL's 132 kV Kavthemahankal SS	1) Replacement of existing 2 x 25 MVA, 132/33 kV TR by 2 x 50 MVA 132/33 kV TR	25 +	220 kV Miraj S/s	
5	M/s Energy India Pvt Ltd	100	Dhuri wadi, Vi Rajeri Kolednon, Gorlewadi Tamewadi, Tal. Mayani Dist Satara	2 x 50 MVA of TRs and 1 x 25 MVA TR of 132/110/33 kV & 132/110 kV DC line from Khanapur SS to LILO on Sangola - Ogalewadi Line		80	220 kV Kandi-Ogalewadi S/s	
6		200	Vadgaonga, Kolhapur	1) 2 x 100 MVA, 220/33 kV TR at Wind farm S/s 2) LILO of 220 kV Kolhapur-Sawantwadi SCDC	1) 2nd circuit stringing of 220 kV Kolhapur - Sawantwadi SCDC	160	220 kV Kolhapur & 220 kV Sawantwadi S/s	
7		100	Chandwad, Nashik	2 x 50 MVA, 132/33 kV TR at Wind Farm S/s 2) 132 kV DC line from Wind Farm S/s to 220/132/33 kV Pimpalgaon S/s		80	220/132 kV Pimpalgaon S/s	
8		125	Mahaja Dindori, Nashik	1) 2 x 50 MVA and 1 X 25 MVA 132/33 kV TRs at 132/33 kV Wind Farm S/s 2) 132 kV DC line from wind farm S/s to 132/33 kV Dindori S/s	1) 132 kV DC line from Dindori to Pimpalgaon S/s	100	220 kV Pimpalgaon S/s	
9	M/s RRB Energy Ltd	40	Ubergaon, Dist - Sindhudurg	1) Replacement of existing 1 x 12.5MVA & 1 x 25MVA, 132/33 kV transformers with 2 x 50 MVA, 132/33 kV at MSETCL's 132/33 KV Talebazar S/s 2) 33KV Feeders from Wind Farm S/s To MSETCL's 132/33 KV Talebazar S/s - 02 nos		32	220 kV Khamgaon S/s	
10		100	Vijayduga, Devgad Dist – Sindhudurg	1) 2x50MVA, 132/33kV TR at Wind farm S/s 2) 132kV Talebazar – Wind farm S/s LILO Line		80	220 kV Kharghar S/s	

11	M/s. Sri Maruti Wind Park Developers	125	Peri Shivapur, Kolhapur	1) 33 kV S/C lines from Wind Farm S/s to 220/33 kV Murnawadi S/s. 6 Nos. 2) 1 x (50-25) MVA 220/33 kV TF at 220/33 kV Murnawadi S/s. 3) 1 x 50 MVA 220/33 kV TF at 220/33 kV Murnawadi S/s		100	220 kV Murnawadi S/s	
12		35	Pish Shivapur, Kolhapur	1) 33 kV 1 No. D/C & 1 No. S/C line from Wind Farm S/S to MSETCL's 220/33 kV Mudhalitta		35	220 kV Mudhalitta S/s	
13		50	Savalaj, Beed	1) TF 2 x 50 MVA, 220/33 kV at proposed 220 kV Paroda s/s 2) 2 nos. of 33 kV U/G lines from wind farm s/s to proposed 220 kV Paroda s/s of MSETCL		54	220kV Paroda S/s	
14		200	Bhoj/Kalmeshwar Tal. Khalapur	1) U/G of 220 kV Wind Farm-Panvel S/C line 2) 2 x 100 MVA, 220/33 kV TF at Wind Farm S/s		180	220 kV Kalwa & 220 kV Panvel	
15		65	Pish Shivapur, Kolhapur	1) 132 kV D/C line from Wind Farm S/s to 220/132/33 kV Mudhalitta S/s. 2) 1 x 100 MVA, 220/132-110 kV ICT at Mudhalitta S/s. 3) 2 x 50 MVA, 132-110/33 kV TF at Wind Farm S/s		55	220 kV Murnawadi S/s	
16	M/s. Sri Maruti Wind Park Developers	50	Vaspatin, Sangli	1) TF 1 x 50, 1 x 25 MVA, 132-110/33 kV at 110/33 kV Valsang wind farm s/s 2) 110 kV S/C line from wind farm stn to 110 kV conversion 110 kV Jath - Sankh line of MSETCL	1) 220/132/33 kV Jath S/s 2) 132 kV S/C D/C line 220 kV Jath - Sankh	72	220 kV Jath S/s	
17		50	Gorewadi Kolhapur	1) 2nd Ckt Stringing of Sawlajwade - Shirala S/C D/C line 2) 10 kV D/C line from Wind farm Site to 132/33 kV Sankhwadi S/s	1) 2nd ckt stringing of 132 kV Shirala - Pish S/C D/C	40	220/132 kV Pish S/s	
18		170	Vaspatin, Sangli	1) 132 kV U/G line from Wind farm site to 132 kV Sangola S/S. 2) TF 2 x 50, 1 x 25 MVA, 110/33 kV at wind farm S/S		136	220 kV Panchanpur S/s	

19		25	Bhuj/Kutch/Jun Tal/ Khirsara/Ver	1) 33 kV Feeders from Wind Farm Site to 132/33 kV Dahiyad S/s		30	220kV Chatral S/s	
20		100	440V/690V, Kolhapur	1) 2 x (100 - 50) MVA, 220/33 kV TF at Tarwan S/s 2) 33 kV feeders from Wind Farm Site to 220/132/33 kV Gokul S/s 4 Nos		60	220kV Kolhapur, Tarwan	
21		185	Fath Shivapur, Kolhapur	1) 2 x 100 MVA 220/33 kV TF at Wind Farm S/s 2) 1 x (100-50) MVA 220/33 kV TF at Hamidwada S/s 3) 220 kV D/C line from Wind Farm S/s to Hamidwada S/s		145	220 kV Hamidwada S/s	
22		250	Fath Shivapur, Kolhapur	1) 3 x 100 MVA 220/33 kV TF at Wind Farm S/s 2) 220 kV D/C line from Wind Farm S/s to Jath S/s	1) 400/220 kV Akola S/s 2) LILO of 220 kV Jath - Mhaisal D/C line at 400 kV Akola S/s	200	220 kV Jath S/s	
23	Dvir Sri Dattaji Wind Farm Developers	75	Fath Shivapur, Kolhapur	1) Out of Existing 2x25 MVA, 220/33 kV TF at Hatkanangle substation of 1x25 MVA TF by 1x50 MVA 220/33 kV TF 2) Addition of 1x50 MVA 220/33 kV at 220/33 kV Hatkanangle S/s 3) 33 kV Feeders from Wind Farm Site to MSETCL's 220/33 kV Hatkanangle S/s		50	220 kV Hatkanangle S/s	
24		450	Nandnagar, Ramnagar, Kolhapur	1) 3 x 100 MVA, 220/33 kV TF at Wind Farm Site 2) 220 kV D/C line from Wind Farm S/s to 220 kV Bhatawari S/s	1) 400/220 kV Akola/Sangar Pandharpur S/s in Maowan 2) 220 kV D/C from Bhatawari - South Solapur (PG)	360	220 kV Bhatawari, 220 kV Mahalgaon & 220 kV Pandharpur	
25	Nos Thacta Wind Pvt Ltd	20	Taluka - Jath, District - Sangli	1) 33 kV Feeder from wind farm to 132/33 kV Jath S/s 2 Nos		16	220 kV Jath S/s	
26		10	Taluka - Jath, District - Sangli	1) 33 kV Feeder from wind farm to 132/33 kV Sanath S/s 1 No		8	220 kV Jath S/s	
27		20	Pandegaon, Satara	1) 33 kV Feeder from wind farm to 132/33 kV Wai S/s 1 No		16	220 kV Lonand S/s	
28	Ms. T S Wind Power Developers Pvt Ltd	50	Vaspet Tal - Jath, Dist - Sangli	1) 1 x 50 MVA 110/33/22 kV TF at proposed 110 kV Jath Substation 2) 33 kV line bays - 03 Nos at proposed 110 kV Jath	1) 220/110/33 kV Jath S/s 2) 132 kV D/C line for Jath to 220 kV MIDC	40	110 kV Jath S/s	
29		30	Gudapanchgani Tal - Shahuwadi, Dist - Kolhapur	1) 1 x 50 MVA 132/33 kV TF at Gambhavde S/s 2) 33 kV D/C line from Wind Farm Site to 132/33 kV Gambhavde S/s	2nd ckt stringing of 132 kV Kolhapur - Shirala SCDC	24	220 kV Panhala S/s	

30		50	Gudepachgani Tal- Shirala Dist- Sangli	1) 1 x 50 MVA, 110/33 kV TF at Shirala S/s 2) 33 kV D/C line from Wind Farm Site to 110/33 kV Shirala S/s	2nd cct stringing of 132 kV Peth - Shirala S/C DC	40	220 kV Peth S/s
31	M/s. T & S Wind Power Developers Pvt. Ltd.	100	Gudepachgani Tal- Shirala Dist- Sangli	1) 2 x 60 MVA, 220/33 kV TF at Wind Farm S/s 2) LILO of 220 kV Karad - Kolhapur ckt. 1 at Wind Farm S/s		50	220 kV Kolhapur 220 kV Kolhapur
32		50	Vankuswade, Satara	1) 1 x 100 MVA, 220/33 kV TF at Vankuswade S/s 2) 33 kV Feeders from Wind Farm to 220/33 kV Vankuswade S/s		40	220 kV Vankuswade S/s
33		40	Dhegaon, Sangli	1) 1 x 60 MVA, 220/33 kV TF at 220/33 kV Vita S/s 2) 33 kV D/C line from wind farm to Vita S/s		33	220 kV Vita S/s
34		300	Dhegaon, Sangli	1) 3 x 100 MVA, 220/33 kV TF at Wind Farm S/s 2) 220 kV D/C line from Wind Farm S/s to Lamboli S/s		200	400/220 kV Lamboli S/s
35		50	Vankuswade, Satara	1) 33 kV Feeders from Wind Farm to 220/33 kV Vankuswade S/s		40	220 kV Vankuswade S/s
36	M/s. Suzlon Energy Ltd.	50	Gude Pachgani, Satara	1) 132/33 kV, 1 x 50 MVA Transformer at Shirala S/S 2) 33kV Line Bays at Shirala S/S - 2 nos	2nd cct stringing of 132 kV Peth - Shirala S/C DC	40	220 kV Peth S/s
37		100	Kas, Satara	1) 132/33 kV, 2 x 50 MVA S/S at Kas 132 kV D/C Line From Satara Road S/S to Kas S/S - 44KV 2) 132 kV L/K bays at Satara Road S/S - 2 nos	2) 1) 2nd cct stringing of 132 kV Satara Road - Lonand S/C DC 2) 2nd cct stringing of 132 kV Satara Road - Satara MIDC S/C DC	50	220 kV Satara Road S/s
38		170	Panchgani, Satara	1) 2 x 100 MVA, 220/33 kV TF at Wind Farm S/s 2) 220 kV D/C line from Wind Farm S/s to Bathalewadi		150	400/220 kV Bathalewadi
39		100	Gavawadi, Satara	1) 2 x 50 MVA and 1 x 20 MVA 132/33 kV TFs at 132/33 kV Wind Farm S/s 2) 132 kV D/C line from wind farm S/s to 132/33 kV Dhegaon S/s	1) 132 kV D/C line from Dhegaon to Pimpalgaon S/s	80	220 kV Pimpalgaon S/s
40		100	Kogaon-I (Kanh) Ahmednagar	1) 2 x 50 MVA 132/33 kV TFs at 132/33 kV Wind Farm S/s 2) 132 kV D/C line from wind farm S/s to 220/132 kV Ahmednagar S/s	1) 132 kV Ahmednagar - Ahmednagar MIDC S/C DC 2) 2nd cct stringing of 132 kV Ahmednagar - Sunai S/C DC 3) 1 x 100 MVA 220/132 kV ICT	50	220 kV Ahmednagar S/s

41		127.5	Kalgaon-II Ahmednagar.	1) 132/33 KV, 2 x 50 MVA S/S at Kalgaon Wind Farm Site 2) 132kV Line Bay at Shingonda & Kalgaon S/S - 1 No at each S/S 3) 132 kV SC on DC line - 25 KM	1) 132 kV DC line from Bhose to Shingonda S/s	152	220 kV Bhose S/s	
42		50	Kavdya Dongar	1) Replacement of 2 x 25 MVA by 2x 50 MVA, 220/33 KV transformer at 220/132/33 KV Ahmednagar S/s 2) 3 No. of 33 KV S/C lines from wind farm site to 220/132/33 KV Ahmednagar S/S.		140	220 kV Ahmednagar S/s	
43		120	Sayleda, Patoda, Beed	1) 220/33 KV, 2 X 100 MVA S/S at Wind Farm 2) 220 KV DC Line From wind farm S/S to Patoda S/S 3) 220 KV Line Bays at Patoda S/S - 2 Nos	1) 132 kV SCDC line from Patoda to Manjarsumba S/s 2) LILO of 132 kv Ashti - Ahmednagar SC at Patoda	136	220kV Patoda & 220 kV Beed S/s	
44	M/s Suzlon Energy Ltd	100	Sausar, Beed	1) 132/33 KV, 2 X 50 MVA S/S at Chinali Wind Farm Site 2) 132kV Line Bays at Parbhani S/S - 2 Nos 3) 132 kV DC line - 20KM	1) LILO of 132 kv Ashti Ahmednagar SC at Patoda.	60	220 kV Patoda & 220 kV Beed S/s	
45		170	Khandaj, Beed	1) 220/33 KV, 2 X 100 MVA S/S 2) 220 KV DC Line From wind farm S/S to Ahmednagar 3) 220 KV Line Bays at Ahmednagar S/S - 2 Nos	1) 220 kV DC line from Ahmednagar - Bhose S/S	136	220 kV Ahmednagar S/s	
46		170	Longewadi, Pune	1) 220/33 KV, 2 X 100 MVA S/S 2) 220 KV DC Line From wind farm S/S to Urse 3) 220 KV Line Bays at Urse S/S - 2 Nos		136	220 kV Urse S/s	
47		200	Longewadi, Pune	1) 220/33 KV, 2 X 100 MVA S/S 2) 220 KV DC Line From wind farm S/S to Chakan S/S 3) 220 KV Line Bays at Chakan S/S - 2 Nos		160	220 kV Chakan S/s	
48		300	Kavathe Mahankal	1) 3 x 100 MVA, 220/33 KV PTR at wind Farm S/s 2) LILO of 220 kV Kolhapur - Sawantwadi DC	1) 2nd ckt stringing of 220 kV Kolhapur - Sawantwadi S/C 2) 2 x 100 MVA, 220/132 kV ICT 3) 132 kV DC from 220 kV Sawantwadi - Kudal	240	220 kV Sawantwadi & 220 kV Kolhapur S/s	

49		100	Hanagra, Aurangabad	1) 1 x 50 MVA, 220/33 kV TF at 220/33 kV Wind Farm S/s 2) 220 kV D/C line from Wind Farm S/s to Phulambri	1) LILO of 132 kV Padegaon - Sillod at Phulambri 2) LILO of 132 kV Sawangi - Pishor at Phulambri	50	220 kV Phulambri S/s	
50		24	Amben, Tal Khatav, Satara	1) 1 x 25 MVA, 132/33 kV TF at 132 kV Ayndh 2) 33 kV Bays - 2 Nos. at 132/33 kV Ayndh	1) 2nd ckt Stringing of 132 kV Dahiwadi - Ayndh Line	19.2	220 kV Phaltan S/s	
51	M/s. Acom Properties Pvt. Ltd	60	Amben, Tal Khatav, Satara	1) LILO of 110 kV Satara Road - Satara MIDC S/C line at Wind farm site 2) 2 x 50 MVA, 132-110/33 kV TF at Wind farm site		40	220 kV Satara Road S/s	
52		100	Amben, Tal Khatav, Satara	1) 132 kV D/C line from Wind Farm S/s to 132 kV Tamdhu S/s 2) 2 x 50 MVA, 132/33 kV TF at Wind farm S/s		80	220 kV Koregaon S/s	
53	M/s. Helargal Wind Power Pvt. Ltd	100	Pare, Satara	1) TF - 2 x 50 MVA, 220/33 kV at Wind Farm S/s site 2) LILO of 220 kV Karad - KDPH S/C line at Wind Farm S/s 3) 33 kV outlets - 5 nos.		80	220 kV Karad & 220 kV KDPH	
54	M/s. Parsons Wind Energy Pvt. Ltd	100	Pare, Satara	1) TF - 2 x 100 MVA, 220/33 kV at Wind Farm S/s site 2) LILO of 220 kV Karad - Koyna S/C line at Wind Farm S/s 3) LILO of 220 kV Karad - Pedhumbe S/C line at Wind Farm S/s 4) 33 kV outlets - 5 nos		80	220 kV Karad, 220 kV Pedhumbe & 220 kV Koyna S/s	
55	M/s. Winrent Power Energy Pvt. Ltd	25	Vanpari, Sangli	1) 33 kV S/C line from Wind Farm to 132-110/33 kV Jath S/s		20	220 kV Jath S/s	
56	M/s. K.P Power Pvt. Ltd	100	Panchpatta, Ahmednagar	1) 2 x 50 MVA, 132/33 kV TF at Wind farm S/s 2) 132 kV D/C line from Wind Farm S/s to 132 kV Akole S/s	1) 2nd ckt Stringing of 132 kV Bebnaushwar - Bargaonwadi SCDC.	80	220 kV Bebnaushwar S/s	
57	M/s. Ganesha Wind Turbines Pvt. Ltd	30	Panchpatta, Ahmednagar	1) 1 x 50 MVA, 132/33 kV TF at 132/33 kV Panchpatta S/s 2) 33 kV Feeders from Wind Farm to 132/33 kV Panchpatta S/s - 2 Nos		24	220 kV Nagar S/s	
	Total	4064				4063		

Solar Power Projects								
1	MAHAGENCO	125	Shirajnagar, Sakri, Dist. Dhule	220/33 kV Sakri S/s	220/132/33 kV Sakri S/s	125	220 kV Dhule S/s	
2	MAHAGENCO	50	Dhorale Tal. Murud, Dist. Osmanabad	220/33 kV S/s at Dhorale, 220 kV SC/DC line from Dhorale to Murud S/s	LILO of 220 kV Ganewadi - Harangul SC line at Dhorale S/s	50	220 kV Murud & 220 kV Harangul S/s	
3	M/s Enrich Solar Pvt. Ltd.	25	Mandrup, Baramati, Pune	33 kV Feeders from Solar Plant to 132/33 kV Mandrup S/s		25	220kV Pandhapur S/S	

(D) **Renewable Purchase Obligation (RPO) target**

Year	Min. quantum of purchase (in %) from RES (in terms of energy equivalent in kwh)		
	Solar	Non-Solar (other RE)	Total
2010-11	0.25%	5.75%	6.00%
2011-12	0.25%	6.75%	7.00%
2012-13	0.25%	7.75%	8.00%
2013-14	0.50%	8.50%	9.00%
2014-15	0.50%	8.50%	9.00%
2015-16	0.50%	8.50%	9.00%

Provided that cumulative increase shall not exceed 1% per year of the Non-solar (other RE) RPO obligation for the period from FY 2010-11 to FY 2012-13 and upto 2% of the Non-solar (other RE) RPO obligation for the period from FY 2013-14 to 2015-16 by way of purchase from Mini Hydro or Micro Hydro power projects

From: pg2 Mahaurja [mailto:pg2@mahaurja.com]
Sent: Friday, February 10, 2012 2:24 PM
To: Kashish Bhambhani
Cc: pcmarthani@nic.in
Subject: Identification of Transmission Infrastructure for likely capacity addition of RE based power plants in 12th plan

Sir

Please find attached file on subject matter.

I/c General Manager (PG-II)

MEDA Pune.

Dear Kashish Bhambhani,

The Wind capacity addition as mentioned in your mail i.e. 6900-5675=1225 MW may not be considered. In this context, the total capacity addition as known from the wind power developers in Maharashtra during the 12th five year plan is 9016 MW. The break-up of this is given as below -

RE Source	2012-13	2013-14	2014-15	2015-16	2016-17	Total
Wind (in MW)	1376	1570	2340	2250	1480	9016

The locations where these wind power projects are likely to come-up are in Dist. Satara, Kolhapur, Ahmednagar, Sangli, Nashik, Aurangabad, Beed, Osmanabad, Ratnagiri & Solapur of Maharahtra.

In our earlier information the wind power potential furnished was 6900 MW from which we had proposed to complete 1500 MW in 12th five year plan. However having latest figures from wind power developers we now propose year-wise capacity addition as given in table above.

In case of solar the total capacity addition in 12th five year plan as informed by MSPGCL will be 905 MW. The locations are already informed in their letter which is forwarded to you.

In our earlier information the capacity addition in solar power given was 525 (PV) + 50 (STh) = 575 MW. However knowing total capacity addition in this sector from MSPGCL the same may be spread out as tabulated below –

RE Source	2012-13	2013-14	2014-15	2015-16	2016-17	Total
Solar Power (in MW)	125	150	175	200	255	905

The figures of capacity addition given for small hydro, bagasse cogeneration and biomass power may be taken as we have communicated earlier at your end.
Hope this will suffice.
with best wishes,

i/c GM (PG-II)
MEDA, Pune

Rajasthan

Data for Renewable Energy Resources and its Transmission Infrastructre

Name of the State Rajasthan

(A) Existing RES

(i)

Total Installed Capacity (MW)	As on November 2011
Wind	1787.345
Solar PV	42
Solar Thermal	2.5
Small Hydro	
Biomass/Waste to Energy	108.3

(ii) **Availability**

	Injection (MWMW)		Injection in Grid Peak/off peak hrs (MWKW)	
	Maximum	Minimum	Peak	Off Peak
Wind				
Solar PV				
Solar Thermal				
Small Hydro				
Biomass/Waste to Energy				

(iii) **Network Connectivity**

Type- Wind / Solar/SHP/Biomass(WTE) etc.

Area-

Sno	Developer	Installed Capacity (kWMW)	Location (Vill/Dist)	Transmission Scheme (details like name of line (D/c or S/c), voltage level(kV), length, Conductor type etc.		Maximum Injection (kWMW)	Name of 220 kV STU S/s for above Injection	Tr. System beyond Injection point
				Immediate Evacuation	Associated Strengthening, if any			
	Total							

Data Received from RRECL during visit of POWERGRID officials on 21-22 Dec'11

(B) **Future- Potential Locations and Capacity**

Wind	2215 MW in Jaisalmer, Jodhpur, Barmer & Pratapgarh Distt. Of Rajasthan
Solar PV	1950 MW in Jaisalmer, Jodhpur, Bikaner, Barmer &Nagaur District of Rajasthan
Solar Thermal	
Small Hydro	
Biomass/Waste to Energy	160 MW at various Distt. Of Rajsthan

(C) **RES Capacity Addition Programme in 12th Plan**

	2012-13	2013-14	2014-15	2015-16	2016-17	Total
(i) Type						
Wind	425	425	425	440	500	2215
Solar PV	450	600	500	400	-	1950
Solar Thermal	30	400	500	500	300	1730
Small Hydro		-	-	-	-	-
Biomass/Waste to Energy	25	25	30	40	40	160

(ii) **Network Connectivity for above proposed Capacity addition, if any**

Type- Wind / Solar/SHP/Biomass(WTE) etc.

Area-

Sno	Developer	Installed Capacity (kW/MW)	Location (Vill/Dist)	Proposed Transmission Scheme details like name of line (D/c or S/c), voltage level(kV), length, Conductor type etc.		Maximum Injection (kW/MW)	Name of 220kV STU S/s for above Injection	Tr. System beyond injection point
				Immediate Evacuation	Associated Strengthening, if any			

(D) Renewable Purchase Obligation (RPO) Quantum

Year	Min. quantum of purchase (in %) from RES (in terms of energy in kwh)			
	Wind	Solar	Biomass/WTE	Total
2011-12	4.5	0.5	1	6
2012-13	5.1	0.75	1.25	7.1
2013-14	5.7	1	1.5	8.2
2014-15				
2015-16				

Meeting with Secretary (Energy), Govt. of Rajasthan along with RVPN/ RRECL on 31.01.12

Capacity Addition in 12th Plan in Rajasthan

Sl.No.		By 31.03.12 (MW)	Addition by 2016-17 (MW)	Total (MW)	Complex wise Break up of 12th plan addition
1	WIND	2100	2000	4100	Banswara & Pratapgarh - 800MW
					Jaisalmer -900MW
					Barmer - 300MW
2	SOLAR	200	3700	3900	Jaisalmer -2700MW
					Jodhpur - 800MW
					Barmer - 100MW
					Bikaner- 300MW

Government of Rajasthan
Energy Department

F.No.F. 20(9) Energy/2009 Dated: 27.1.2012

MEETING NOTICE

A meeting will be held on 31.1.2012 at 12.30PM under the Chairmanship of Secretary, Energy in his Chamber to discuss the Inter-State evacuation requirement for evacuation of power from Renewable Energy Projects in Rajasthan upto 2016-17.

Following are requested to kindly make it convenient to attend the meeting:-

1. Director (Technical) RVPN
2. Director (Technical), RREC
3. Director (Technical), Jd. VVNL,
4. Director (Power Trading), JVVNL
5. Executive Director (PGCIL),
6. S.E. (P&P& Design), RVPNL
7. Project Manager, (GIPP)RREC

27.01.2012

(Subhash Pareek)
Assistant Secretary to Govt.

Copy to the following for information and necessary action:-

1. P.S. to Secretary, Ministry of New & Renewable Energy, Govt. of India, New Delhi.
2. P.S. to Secretary Energy.
3. Director (Technical) RVPN.
4. Director (Technical), RREC.
5. Director *Technical), Jd. VVNL,
6. Director (Power Trading), JVVNL.
7. Executive Director (PGCIL),
8. S.E. (P&P & Design), RVPNL.
9. Project Manager, (GIPP) RREC.

27.01.2012

(Subhash Pareek)
Assistant Secretary to Govt.

Wind Farm Projects are proposed to be located in Banswara & Pratapgarh districts

Name of the Wind Farm Project	Pooling s/s of developer	Receiving s/s of RVPN	FY 2014-15
M/s VWIL's WF Project in Banswara District	Nawagaon	Proposed 400/220 kV GSS Banswara (Under Wind Evacuation scheme 220 kV switching station at Banswara has been approved)	125 MW
	Kusalgarh		320MW
M/s Renewable Energy Generation Pvt. Ltd.'s WF project in Pratapgarh Districts	Near to Village Dalot	132 kV GSS Dalot	60 MW
			100.50 MW (Under consideration)
M/s Renewable Energy Generation Pvt. Ltd.'s WF project in Pratapgarh Districts	Near to Village Achalpur	132 kV GSS Pratapgarh (To be upgraded to 220 kV GSS - under construction)	51 MW
	Total		651.50 MW

Proposed interstate transmission system from RVPN's proposed 400/220 kV GSS Banswara GSS.

- 400 kV D/C Banswara-Nagda (PGCIL) line (80-90 KM line length)
- 400 kV D/C Banswara-Dehgam (PGCIL) line (80-90 KM line length)

Proposed Interstate Lines for evacuation of RE Power

S.No.	Particulars of Line	Length of Line (Km)	Cost (Rs. in Lacs) (Including IDC)
A			
1	400 kV D/C Bhadla-Bikaner Line (Quad Moose)	180	42589.77
2	400 kV D/C Bikaner-Sikar Line (Twin Moose)	210	20851.06
	Tatal A (1+2)	390	63440.43
B			
1	400 kV D/C Jaisalmer (2)-Barmer Line (Twin Moose)	130	13498.12
2	400 kV D/C Barmer-Bhinmal Line (Twin Moose)	140	13902.43
	Tatal B (1+2)	270	27400.55
	Grand Total (A+B)	660	90840.98

D. C. CALCULATION- MODIFIED POWER EVACUATION SYSTEM OF SOLAR & NEW WIND POWER PLANTS :

A. Details of Modified Transmission system covered under the scheme

(Rs in lacs)

S.No.	Details of Transmission System covered under Power Evacuation Scheme of Solar & New Wind Power Plants	Route Length (in km)	Estimated Cost (including IDC)	Refer
1	400/220 kV, 3 x 500 MVA and 220/132 kV, 3x160 MVA, with 132/33kV, 2x40/50 MVA Pooling Sub-Station GSS at Ramgarh (Jaisalmer) alongwith 400kV, 1x125 MVAR 400kV Shunt Reactor (line type) and 3x50 MVAR Shunt Reactor (bus type) for 400kV D/C Ramgarh-Bhadla line	-	24835.26	Annexure-I(a)
2	400/220 kV, 3 x 315 MVA and 220/132 kV, 3x160 MVA with 132/33kV, 2x40/50 MVA Pooling Sub-Station GSS at Bhadla (Jaisalmer) alongwith 400kV, 1x125 MVAR Shunt Reactor (bus type) and 4x50 MVAR, 400kV Shunt Reactors (Line type) for Bhadla ends of 400kV D/C Bhadla-Bikaner line, 400kV LILO Jodhpur-Merta at Bhadla line and 400kV D/C Ramgarh-Bhadla line.		27091.51	Annexure-I(b)
3	Augmentation of 400kV GSS Merta by installation of 315/220 kV, 1 X 500 MVA Transformer alongwith 400kV, 1x125 MVAR Bus Reactor and 400kV, 2x50 MVAR Shunt Reactor (line type) for proposed 400kV Merta-Jodhpur (New) line.	-	7118.12	Annexure-I(c)
4	Augmentation of 400kV GSS Jodhpur (New)			
(i)	2x50 MVAR, 400kV Shunt Reactor (line type) at 400kV GSS Jodhpur (New) for 400kV D/C Merta-Jodhpur (New) line.	-	2862.66	Annexure-I(d)
(ii)	400kV bays at Jodhpur (New) for LILO of one ckt. of 400kV D/C Raj West LTPS-Jodhpur line.			
5	Augmentation of 400kV GSS Barmer	-		
(i)	1x125 MVAR, 400kV Shunt Reactor (Bus type) at 400kV GSS Barmer		2560.18	Annexure-I(e)
(ii)	400kV bays for 400kV D/C Barmer-Bhadla (PG) line			
6	Augmentation at 400kV GSS Bikaner	-		
(i)	1x125 MVAR, 400kV Bus Reactor at 400kV GSS Bikaner GSS		4033.80	Annexure-I(f)
(ii)	400kV Bays for 400kV D/C Bhadla-Bikaner line and 400kV D/C Bikaner-Sikar (PGCIL) line at Bikaner end of Bus Bar			
7	400kV Interconnecting Lines :	-		
(i)	400 kV D/C Ramgarh (Jaisalmer)-Akal (Jaisalmer) line (Twin Moose)	100	6264.50	
(ii)	400kV D/C Ramgarh-Bhadla line (Twin Moose)	180	14404.00	
(iii)	400kV D/C Bhadla-Bikaner line (Quad Moose)	180	34727.80	
(iv)	400kV D/C line from 400/220kV Pooling Station Bhadla to LILO point of 400kV S/C Jodhpur-Merta line (Twin Moose)	180	13804.00	Annexure-II(g)
(v)	400kV D/C Bikaner-Sikar (PGCIL) line (Twin Moose)	210	16804.00	
(vi)	400 kV D/C Barmer-Bhadla (PGCIL) line (Twin Moose)	140	11204.00	
(vii)	LILO of one circuit of 400kV D/C Raj West-Jodhpur line at 400kV GSS Jodhpur (New) (Twin Moose)	50	4004.00	
(viii)	400kV D/C Merta-Jodhpur (New) line (Quad Moose)	240	46782.40	
8	220kV GSS at Bap and associated lines.	-		
(i)	220/132kV, 2x160 MVA & 132/33kV, 2x40/50 MVA GSS at Bap (Distt. Jodhpur)	-	8948.69	Annexure-II(h)
(ii)	LILO of 220kV Barmer-Pali LTPS-Phalodi line at new Bap	25		
(iii)	220kV D/C Bap-Bhadla line	50		
9	220kV GSS at Kanasar and associated lines			
(i)	220/132kV, 2x160 MVA & 132/33kV, 2x40/50 MVA GSS at Kanasar (Distt. Jodhpur)	-	8478.58	Annexure-II(i)
(ii)	220kV D/C Bhadla-Kanasar line	20		
(iii)	LILO of 132kV PS1-PS3 line at proposed 220kV GSS at Kanasar	12		
(iv)	LILO of 132kV PS1-PS3 line at proposed 220kV GSS at Kanasar	10		
10	Up-gradation of PS No. 2 to 132kV GIS Substation with 132/33kV, 2x20/25 MVA Transformers with associated 132kV etc	-	1806.28	Annexure-II(j)
11	Up gradation of PS No. 3 to 132kV GIS Substation with 132/33kV, 2x20/25 MVA Transformers	-	1806.28	Annexure-II(k)
12	Charging of 132 kV line from PS No.3 to PS No.7 on 132 kV voltage level as 132 kV PS_No 2-GSS, 132 kV PS_No.3 GSS and 132kV PS_No.4 GSS	-	579.35	Annexure-II(l)
13	Up gradation of PS No. 4 to 132kV GIS Substation with 132/33kV, 2x20/25 MVA Transformers	-	1806.28	Annexure-II(m)
	TOTAL PROJECT COST		238627.89	

B. IDC Calculation of complete project cost of the power evacuation scheme :

(Allgarh-wise Rs. lacs)

Year	% Loan during the year	Opening Balance	Loan during the year	Interest @ 11.0% Opening balance	Interest % 5.50% loan during the year	Total I.D.C. (5+6)	Loan during the year with IDC (4+7)	Closing Balance with IDC (3+4+7)
1	2	3	4	5	6	7	8	9
I	20%	0.00	47305.60	0.00	2601.81	2601.81	49907.41	49907.41
II	30%	49907.41	70958.40	5490.81	3902.71	9392.53	80150.80	130058.33
III	30%	130058.33	70958.40	14306.42	3902.71	18231.13	89189.52	219447.85
IV	20%	219447.85	47305.63	24139.26	2601.61	26741.07	73548.67	293494.52
Total	100%		236527.83	43937.49	12008.04	56945.53	293494.52	

TOTAL PROJECT COST INCLUDING I.D.C.=Rs. 293494.52 Lacs (Say Rs.= 2934.94 Crores)

(Two thousand nine hundred thirty four crores only)

C. Estimated cost with IDC of individual item covered under the power evacuation scheme :

(Rs. in Lakh)

S.No	Modified Transmission System covered under Power Evacuation Scheme of Solar & New Wind Power Plants	Route Length (in KM)	Estimated Cost (excluding IDC)	Estimated Cost (including IDC)
1	400/220 kV, 2 X 500 MVA and 220/132 kV, 2x160 MVA and 132/33 kV, 2x40/50 MVA Pooling Sub-Station GSS at Ramgarh (Jaisalmer) along with 125 MVAR, 400 kV Shunt Reactor (Bus type) and 2x50 MVAR, 400 kV Shunt Reactor (Line type) for 400 kV D/C Ramgarh-Bhadla line		24834.26	30420.91
2	400/220 kV, 3 X 315 MVA and 220/132 kV, 2x160 MVA and 132/33 kV, 2x40/50 MVA Pooling Sub-Station GSS at Bhadla (Jaisalmer) along with 400 kV, 1x125 MVAR Shunt Reactor (bus type) and 1x50 MVAR, 400 kV Shunt Reactors (Line type) for Bhadla end of 400 kV D/C Bhadla-Ukersar line, 400 kV LILO point (Akal) of Bhadla-Ukersar and 400 kV D/C Ramgarh-Bhadla line		27291.26	33018.41
3	Augmentation of 400 kV GSS Akal by installation of 400/220 kV, 1 X 500 MVA Transformer along with 400 kV, 1x125 MVAR Bus Reactor and 400 kV, 2x50 MVAR Shunt Reactor (line type) for proposed 400 kV Akal-Jodhpur (New) line.	-	7119.12	8837.46
4	Augmentation of 400 kV GSS Jodhpur (New)			
(i)	2x50 MVAR, 400 kV Shunt Reactor (line type) at 400 kV GSS Jodhpur (New) for 400 kV D/C Akal-Jodhpur(New) line		2982.96	3701.39
(ii)	400 kV bays at Jodhpur (New) for LILO of one ckt of 400 kV D/C Raj West LTPS-Jodhpur line.			
5	Augmentation of 400 kV GSS Barmer	-	2569.76	3177.51
(i)	1x125 MVAR, 400 kV Shunt Reactor (Bus type) at 400 kV GSS Barmer			
(ii)	400 kV bays for 400 kV D/C Barmer-Dhirmal (PG) line			
6	Augmentation of 400 kV GSS Bikaner	-	4001.80	4968.21
(i)	1x125 MVAR, 400 kV Bus Reactor at 400 kV GSS Bikaner GSS			
(ii)	400 kV Bays for 400 kV D/C Bhadla-Bikaner line and 400 kV D/C Bikaner-Sikar (PGCIL) line at Bikaner end of the line			
7	400 kV Interconnecting Lines .	-		
(i)	400 kV D/C Ramgarh(Jaisalmer)-Akal (Jaisalmer) line (Twin Moose)	100	8004.00	9931.72
(ii)	400 kV D/C Ramgarh-Bhadla line (Twin Moose)	180	14404.00	17873.13
(iii)	400 kV D/C Bhadla-Bikaner line (Quad Moose)	180	34322.80	47589.27
(iv)	400 kV D/C line from 400/220 kV Pooling Station Bhadla to LILO point at 400 kV S/C Jodhpur-Merta line (Twin Moose)	160	12804.00	15887.78
(v)	400 kV D/C Bikaner-Sikar (PGCIL) line (Twin Moose)	210	16804.00	20851.18
(vi)	400 kV D/C Barmer-Bhadla (PGCIL) line (Twin Moose)	140	11204.00	13902.43
(vii)	LILO of one circuit of 400 kV D/C Raj West-Jodhpur line at 400 kV GSS Jodhpur (New) (Twin Moose)	50	4004.00	4968.54
(viii)	400 kV D/C Akal-Jodhpur (New) line (Quad Moose)	242	45762.40	56784.04
8	220 kV GSS at Bap and associated lines:			
(i)	220/132 kV, 2x160 MVA & 132/33 kV, 2x40/50 MVA GSS at Bap (Distt. Jodhpur)	-	8848.53	10977.17
(ii)	LILO of 220 kV Balesar-Jodhpur LTPS-Phalodi line at Bap	25		
(iii)	220 kV D/C Bap-Bhadla line	90		
9	220 kV GSS at Kanasar and associated lines:			
(i)	220/132 kV, 2x160 MVA & 132/33 kV, 2x40/50 MVA GSS at Kanasar (Distt. Jodhpur)	-	6376.56	7914.83
(ii)	220 kV D/C Bhadla-Kanasar line	25		
(iii)	LILO of 132 kV PS1-PS2 line at proposed 220 kV GSS at Kanasar	12		
(iv)	LILO of 132 kV PS3-PS4 line at proposed 220 kV GSS at Kanasar	12		
10	Up-gradation of PS_No. 3 to 132 kV Grid Substation with 132/33 kV, 2x20/25 MVA Transformers with 4x400 mm2 132 kV line	-	1409.29	1803.12
11	Up-gradation of PS_No. 0 to 132 kV Grid Substation with 132/33 kV, 2x20/25 MVA Transformers	-	1409.29	1803.12
12	Changing of 132 kV line from PS_No. 6 to PS_No. 1 on 132 kV voltage level via 132 kV PS_No. 2 GSS, 132 kV PS_No. 3 GSS and 220 kV PS_No. 4 GSS	-	572.05	718.48
13	Up-gradation of PS_No. 4 to 132 kV Grid Substation with 132/33 kV, 2x20/25 MVA Transformers	-	1409.29	1803.12
	TOTAL PROJECT COST		234837.98	293494.52
	TOTAL PROJECT COST Say Rupees		2934.96	Crores

Note: 1. Single Phase Solar Power Plants and Wind Power Plants in Jaisalmer and Jodhpur area would be commissioned in a phased manner over a period of 2-3 years. Therefore, the ems associated transmission system which would be developed for power evacuation from these plants would also be commissioned in a phased manner. It is proposed that initially the 400 kV transmission lines at 400 kV Ramgarh GSS and 400 kV Bhadla GSS would be constructed and energised on 220 kV voltage level and as and when sufficient generation to the extent of 700-1000 MW would be available at 400 kV Ramgarh GSS and 400 kV Bhadla GSS, the associated 400 kV GSSs would be commissioned

Note: 2. Executing in Four Phases: 2nos. Transformers of each level (i.e. 400/220kV, 220/132kV and 132/33kV) at Ramgarh and Bhadla, 4 nos. 400kV bays at Ramgarh and 4 nos. 400kV bays at Bhadla, 6 nos. 220kV, 6 nos. 132kV and 6 nos. 33kV bays each at Ramgarh and Bhadla

Note: 3. Turnkey Execution: 400/220kV transmission system under the scheme shall be executed on Turnkey Basis.

Note: 4. The 220kV and 132kV GSSs under the above scheme are for power evacuation from Wind & Solar power plants, therefore, maps are not to be included under normal scope of 66kV GSSs

Annexure-I

REVISED I. D. C. OF LOCATION- SUPPLEMENTARY POWER EVACUATION SYSTEM FOR SOLAR POWER PROJECTS :

* Details of Supplementary Transmission system covered under this scheme:

(Rs. in Lacs)

S. No.	Supplementary Transmission System for Power Evacuation of Solar Power Projects in Jaisalmer, Barmer, Jodhpur and Bikaner Districts	Route Length (in km)	Estimated Cost (excluding IDC) at Prevailing PPI	Estimated Cost (including IDC)	Refer
1	400/220 kV, 2 X 500 MVA GSS at Jaisalmer-2(II) along with 1x125 MVAR, 400kV Bus Type Reactor	-	[illegible]	[illegible]	Annexure-V(A)
2	400 kV D/C Jaisalmer-2-Barmer line	132	[illegible]	[illegible]	Annexure-I(A)
3	400 kV S/C Akal(II)- Jaisalmer-2 line	50	[illegible]	[illegible]	Annexure-I(C)
4	400kV Terminal Bay Equipment at 400/220 kV GSS Barmer (for interconnection of 400 kV D/C Jaisalmer 2 - Barmer line at Barmer end)	-	[illegible]	[illegible]	Annexure-I(C)
5	400kV Terminal Bay Equipment at 400/220 kV GSS Akal 1 (for interconnection of 400 kV S/C Akal 1 - Jaisalmer 2 line at Akal 1 end)	-	[illegible]	[illegible]	Annexure-I(C)
6	220kV GSS at Badisid (near Bap) (Jodhpur Distt.) :			[illegible]	Annexure-I(F)
	(i) (a) 220/132 KV, 1x160 MVA and 132/33kV, 1x20/25 MVA GSS at Badisid		[illegible]		
	(b) 2 Nos. 220kV bays at 220kV GSS Badi		175.84		
	(c) 220 kV D/C Badisid-Bap (LILO 220 kV GSS) line	15	541.85		
	(d) 220 kV D/C Badisid-Asu (Proposed 220 kV GSS) line	50	[illegible]		
7	220kV GSS at Asu (near Sojati) (Jodhpur Distt.):			[illegible]	Annexure-I(g)
	(i) (a) 220/132 KV, 1x160 MVA and 132/33kV, 1x20/25 MVA GSS at Asu	-	[illegible]		
	(b) 2 Nos. 220kV bays at 220kV GSS Badisid		175.84		
	(c) 220 kV D/C Asu-Badisid (LILC 220 kV GSS) line	42	[illegible]		
	(d) LILO of existing 132 kV S/C Asu(132 kV GSS)-Phalodi line at proposed 220 kV GSS Asu	5	119.65		
8	220 kV GSS at PS_1(New location other than PHOTO site) (Bajju (New location) (Bikaner Distt.))			[illegible]	Annexure-I(H)
	(i) (a) 220/132 KV, 1x160 MVA and 132/33kV, 1x20/25 MVA GSS at PS_1(New location) (Bajju (New location))	-	[illegible]		
	(b) 2 Nos. 220kV bays at 400/220kV GSS Bhadla		175.84		
	(c) 220 kV D/C PS_1 (Bajju -Bhadla (LILC 400 kV GSS) line	20	722.30		
	(d) LILO of existing 132 kV S/C PS-1-Bajju line at proposed 220 kV GSS PS_1 (Bajju	10	239.30		
9	220 kV GSS at Ramsin Ki par (Near Pusaria) (Jodhpur Distt.):			[illegible]	Annexure-I(I)
	(i) 220/132 KV, 1x160 MVA and 132/33kV, 1x20/25 MVA GSS at Ramsin Nagar (Phalodi)		[illegible]		
	(ii) LILO of one circuit of D/C 220 kV (D/C Dechu-Phalodi) line at proposed 220 kV GSS Ramsin Nagar	5	180.96		
10	220 kV GSS at Chanali (Jaisalmer Distt.):			[illegible]	Annexure-I(J)
	(i) (a) 220/132 KV, 1x160 MVA and 132/33kV, 1x20/25 MVA GSS at Chanali (Jaisalmer)	-	[illegible]		
	(b) 2 Nos. 220kV bays at Ramgarh (400kV GSS)		175.84		
	(c) 220 kV D/C Chanali-Ramgarh (LILC 400 kV GSS) line	80	[illegible]		
11	220 kV GSS at Poksran (near Jsr.) (Jaisalmer Distt.):			[illegible]	Annexure-I(K)
	(i) 220/132 KV, 1x160 MVA and 132/33kV, 1x20/25 MVA GSS at Poksran (near Jsr)	-	[illegible]		
	(ii) LILO of both circuits of D/C 220 kV D/C Ramgarh GTPS – Dechu line at Poksran (2kM D/C each x 2 = 10kM D/C)	10	[illegible]		
	(iii) LILO of existing 132 KV S/C Chandan-Poksran line at proposed 220 kV GSS Poksran	10	[illegible]		
12	220 kV GSS at Kolayat (New loc.) (Bikaner Distt.):			[illegible]	Annexure-I(L)
	(i) (a) 220/132 KV, 1x160 MVA and 132/33kV, 1x20/25 MVA GSS at Kolayat (New loc.)		[illegible]		
	(b) 2 Nos. 220kV bays at 220kV GSS Gajner		175.84		
	(c) 220 kV D/C Gajner (LILC 220 kV GSS)- Kolayat line	15	[illegible]		
	(d) LILO of existing 132 KV S/C Kolayat-Bajju line at proposed 220 kV GSS Kolayat	10	[illegible]		
13	LILO of 220kV D/C Ramgarh GTPS - Dechu line at 400kV Ramgarh:	-		[illegible]	Annexure-I(M)
	(i) LILO of both circuits of 220kV D/C Ramgarh GTPS- Dechu line at 400kV Ramgarh (Mid D/C each for pole mounted + conv Mid DC)	1	[illegible]		
14	2 Nos., 132/33kV, 1x20/25 MVA Capacity GSS Sub-Stations alongwith approx. 26kM long 132kV D/C line from each of 132kV GSS(s) in the vicinity of 220 kV Proposed proposed 220kV GSS, at Badisid (Near Bap), Asu (New location), PS-1(Bajju (New location)), Ramsin Ki par (Phalodi), Chanali (Ramgarh) Poksran (New location), Kolayat (New location), Ramsar, Bap and Bhadla (proportion) [illegible] with dual cellcom at Ramsar(RSC). [TOTAL: 26 Nos. 132kV GSSs with approx. 26kM long 132kV D/C line interlinks and with nine of 26 nos. 132kV GSS i.e. total 132kV line length= 234kM]	-	-	[illegible]	Annexure-I(N)
	(i) 300kM long 132kV D/C lines for 26 Nos. 132kV GSS	25	[illegible]		
	(ii) 26 nos 132/33kV, 1x20/25 MVA Capacity Grid Sub-Station	-	[illegible]		
15	Optical Fiber Cable System for 220kV & 132kV Schemes already approved under Main Transmission System for Solar & Wind Power Plants (as per Appendix-III) & Smart Grid Applications				
	(i) 220kV Transmission Lines already approved under Main Transmission System for Solar & Wind Power Plants (Total Route length 160kM)	160	[illegible]	[illegible]	Annexure-I(O)
	(ii) 132kV Transmission Lines already approved under Main Transmission System for Solar & Wind Power Plants (Total Route length 22kM)	22	[illegible]	[illegible]	
	(iii) Scheme formulation for Integration of Smart Grid applications etc		[illegible]	[illegible]	
	TOTAL PROJECT COST		[illegible]	[illegible]	

B. IDC Calculation of complete project cost of the power evacuation scheme :

(Rs. in Lakhs)

Year	[illegible]	[illegible]	[illegible]	[illegible]	[illegible]	[illegible]	[illegible]	[illegible]
1	2	3	4	5	6	7	8	9
[illegible]	[illegible]	[illegible]	[illegible]	[illegible]	[illegible]	[illegible]	[illegible]	[illegible]
[illegible]	[illegible]	[illegible]	[illegible]	[illegible]	[illegible]	[illegible]	[illegible]	[illegible]
[illegible]	[illegible]	[illegible]	[illegible]	[illegible]	[illegible]	[illegible]	[illegible]	[illegible]
[illegible]	[illegible]	[illegible]	[illegible]	[illegible]	[illegible]	[illegible]	[illegible]	[illegible]
[illegible]	[illegible]		[illegible]	[illegible]	[illegible]	[illegible]	[illegible]	

TOTAL PROJECT COST INCLUDING I.D.C. [illegible] 13[illegible]19.79 lacs. (Say Rs. [illegible] Crores)

C. Detailed cost with IDC of individual item covered under the power evacuation scheme :-

(Rs. in Lakhs)

S.No.	Supplementary Transmission System for Power Evacuation Scheme of Solar Power Projects in Jaisalmer, Barmer, Jodhpur and Nagaur Districts	Route Length (in km)	Estimated Cost (excluding IDC)	Estimated Cost (including IDC)
I	[illegible] 220 kV, [illegible] MVA GSS at Jaisalmer-[illegible] (Bangalath 1x125 MVA & [illegible] MVA Type Reactor	-	15091.74	16079.79
II	400 kV D/C Jaisalmer-2 - [illegible] line	135	10492.00	13496.12
3	400 kV D/C Akal (II) - Jaisalmer-2 line	50	2729.00	3518.51
4	400kV Terminal Bay Equipment at 400/220kV GSS Barmer (for termination of 400 kV D/C Jaisalmer 2 - Barmer line in Barmer end)	-	5807.02	5879.21
5	400kV Terminal Bay Equipment at 400/220kV GSS Akal 4 (for termination of 400 kV D/C Akal 1 - Jaisalmer 2 line at Akal 1 end)	-	1411.66	1436.11
6	220kV GSS at Bhadla (New) (Jodhpur Distt.) :			
	(i) (a) 220/132 kV, 1x160 MVA and 132/33kV, 1x50/25 MVA GSS at Bhadla		3842.03	4663.80
	(b) 2 Nos. 220kV bays at 220kV GSS Bap		173.84	224.14
	(c) 220 kV D/C Bhadla-Bap (LILO 220 kV GSS) line	36	541.66	698.37
	(d) 220 kV D/C Bhadla-Jura (Proposed 220 kV GSS) line	80	1808.56	2337.91
7	220kV GSS at Bap (New Site) (Jodhpur Distt.)			
	(i) (a) 220/132 kV, 1x160 MVA and 132/33kV, 1x50/25 MVA GSS at Bap	-	3848.96	4967.87
	(b) 2 Nos. 220kV bays at 220kV GSS Bhadla		173.84	224.14
	(c) 220 kV D/C Bap-Bhadla (LILO 220 kV GSS) line	42	1444.46	1862.33
	(d) LILO of existing 132 kV D/C Jura(132 kV GSS)-Phalodi line at proposed 220	5	118.66	154.27
8	220 kV GSS at Fa_1(New location other than PHED site / Baglu (New location) / Baliu (New location)) :			
	(i) (a) 220/132 kV, 1x160 MVA and 132/33kV, 1x50/25 MVA GSS at Fa_1(New location) / Baliu (New location)	-	3816.86	4921.35
	(b) 2 Nos. 220kV bays at 220/132kV GSS Baliu	-	173.84	224.14
	(c) 220 kV D/C Fa_1 / Baglu - Baliu (LILO 400 kV GSS) line	35	722.24	931.38
	(d) LILO of existing 132 kV D/C Fa_1 Baglu line is proposed 220 kV GSS Fa_1 / Baliu	18	389.39	502.54
9	220kV GSS at Ramdev Nagar (Near Phalodi) (Jodhpur Distt.) :			
	(i) 220/132 kV, 1x160 MVA and 132/33kV, 1x50/25 MVA GSS at Ramdev Nagar (Phalodi)	-	3842.79	4955.60
	(ii) LILO of one circuit of D/C 220 kV D/C Dechu-Phalodi line at proposed 220 kV GSS Ramdev Nagar	3	193.65	252.79
10	220 kV GSS at Chanda (Jaisalmer Distt.) :			
	(i) (a) 220/132 kV, 1x160 MVA and 132/33kV, 1x50/25 MVA GSS at Chanda		3677.80	4741.94
	(b) 2 Nos. 220kV bays at Ramgarh (400kV GSS)	-	173.84	224.14
	(c) 220 kV D/C Chanda-Ramgarh (LILO 400 kV GSS) line	69	2168.60	2795.48
11	220 kV GSS at Pokaran (New loc.) (Jaisalmer Distt.) :			
	(i) 220/132 kV, 1x160 MVA and 132/33kV, 1x50/25 MVA GSS at Pokaran (New loc.)	-	3861.41	6139.01
	(ii) LILO of both circuits of D/C 220 kV D/C Ramgarh GTPP – Dechu line at	80	351.10	455.66
	(iii) LILO of existing 132 kV D/C Chandan-Pokaran line is proposed 220 kV GSS Pokaran	10	238.50	308.64
12	220 kV GSS at Kolayat (New loc.) (Bikaner Distt.) :			
	(i) (a) 220/132 kV, 1x160 MVA and 132/33kV, 1x50/25 MVA GSS at Kolayat (New	-	3816.86	4921.35
	(b) 2 Nos. 220kV bays at 220kV GSS Chanda	-	173.84	224.14
	(c) 220 kV D/C Chanda-Kolayat (LILO 220 kV GSS)-Kolayat line	15	541.66	698.37
	(d) LILO of existing 132 kV D/C Kolayat-Baglu line is proposed 220 kV GSS Kolayat	12	289.50	373.54
13	LILO of 400kV D/C Ramgarh GTPS- Dechu line at 400kV Ramgarh :			
	(i) LILO of both circuits of 220kV D/C Ramgarh GTPS- Dechu line at 400 kV Ramgarh (New D/C short tie for both circuits i.e. total 2x4 D/C)	2	467.78	541.31
14	2 Nos., 63/25MV, 1x25/28 MVA Capacity Grid Sub-Stations alongside approx. 20mtr long 132kV D/C line pole each of 132kV GSS in the periphery of 30km interior proposed 220kV GSSs at Bhadla (Near Baap), Jura (Near Jaisalmer), FS-4 Baglu (New Location), Ramdev Nagar (Phalodi), Chanda (Ramgarh), Pokaran (New location), Kolayat (New location), Pokaran, Bap and Bhadla (220/132kV) (location of 132kV GSS to be identified later on by survey team with field officers of RVPN/RRVPNL). (TOTAL: 30 Nos. 132kV GSSs with approx. 15km long 132kV D/C line associated with each of 30 nos. 132kV GSS i.e. total 132kV line length= [illegible])			
15	500km long 132kV D/C line to 20 nos. 132kV GSS	29	14995.05	15439.97
16	20 nos 132/33kV, 1x25/28 MVA Capacity Grid Sub-Stations	-	28434.70	34074.08
III	Optical Fibre Cable Systems for 220kV & 132kV GSS where already approval under Main Transmission System for New Solar & Wind Power Plants (as per Annexure-III) & Smart Grid Applications :			
	(i) 220kV Transmission Lines already approved under Main Transmission System for Solar & Wind Power Plants (Total Route length 140km)	140	700.00	892.64
	(ii) 132kV Transmission Lines already approved under Main Transmission System for Solar & Wind Power Plants (Total Route length 22km)	22	110.00	141.40
	(iii) Software Development for Energy Conservation, Smart Grid Applications etc.	-	100.00	128.93
	TOTAL PROJECT COST		[illegible]	13[illegible].79
	Say Rs. [illegible] (including IDC)		[illegible]	Crores

(iii) Approx. 400kV GSS at Jaisalmer (i.e. Jaisalmer-2) (Substation to be developed at a distance [illegible] from 400kV GSS at Akal) [illegible]

* 220 kV GSS at Fa_1 (New location other than PHED site) / Baglu (New location)

Government of India
Central Electricity Authority
SP&PA Division
R.K. Puram, New Delhi -110066

No. 208/6/2011-SP&PA/ 925

Dated: 16.06.2011

O/o S. E. (P&P) RVPNL : JAIPUR
R. R. No. 1372
Date 22.6.11
XEN(PSS/HYDEL/PROJ./MONIT/
JR. ACCTS OFFICER ( )
OS (P&P) SE (P&P)

Shri Shashi Shekhar
Joint Secretary
Ministry of New & Renewable Energy
Block No. -14, CGO Complex
Lodhi Road, New delhi-110003

Subject: Proposal of Rajasthan for funding intra-state power evacuation projects for their upcoming Renewable Energy Generation Projects.

Sir,

Your kind reference invited to letter no. JS/01/2011-12/TID dated 09.05.2011 vide which proposals of Tamilnadu & Rajasthan were forwarded to CEA for examination.

2. The proposal of Tamilnadu was discussed with TNEB Engineers on 06.06.2011 and our observations on their proposal were sent to your office vide our letter no. 56/20/2011-SP&PA/233 dated 10.06.2011.

3. Regarding Rajasthan's proposal, it is intimated that RRVPNL submitted their revised power evacuation proposal having estimated cost of Rs 2349.11 Crs (duly approved by Rajasthan State Govt.) vide their letter no. F13(28)Energy/2004/part dated 09.06.2011 to CEA

4. The above proposal for evacuation of 2650 MW of additional RE generation in Rajasthan was simulated and system studies in 12th plan time frame were carried out by CEA & Powergrid. The results of load flow studies and reactive compensation studies were analyzed.

5. A meeting was convened in CEA on 15.06.2011 with representatives of Powergrid, RRVPNL and MNRE to discuss the findings of system studies. After detailed deliberations, it was decided to carry out following modifications in the proposal:-

   a) Provision of 3x500 MVA, 400/220 kV Transformers in place of 3x315 MVA, 400/220 kV Transformers at Ramagarh S/s proposed by RRVPN.

23/6 AA (PSS)
Pl put up
29/6

b) Augmentation of 400 kV Akal S/s by installing 1x500 MVA, 400/220 kV Transformer (in place of 1x315 MVA 400/220 kV Transformer proposed RRVPN).

c) Provision of 1x125 MVAR,400 kV Bus Reactor each at 400 kV Akal & Bikaner S/s.

d) Provision of 50 MVAR line reactors (2 nos.) on 400 kV Ramgarh – Bhadla D/C line at Ramgarh end (in place of 50 MVAR line reactors(4 nos.) on both ends proposed by RRVPNL).

e) Provision of 50 MVAR, line reactors (2 nos) on 400 kV Bhadla-Bikaner D/c line at Bhadla end (in place of 50 MVAR,line reactors(4 nos) on both ends proposed by RRVPNL).

f) (i) Provision of 50 MVAR line reactor on 400 kV Jodhpur –Bhadla S/c line at Bhadla end

(ii) Provision of 50 MVAR line reactors(2nos) on 400 kV Bhadla –Merta S/c line at both ends.

g) Provision of 50 MVAR line reactors (4 nos) on 400 kV Akal –Jodhpur D/c (Quad) line on both ends (in place of 80 MVAR line reactors(4 nos) on both ends proposed by RRVPNL).

h) Provision of 50 MVAR line reactors (2 nos) on 400 kV Bikaner –Sikar D/c line at Sikar end (in place of 50 MVAR line reactors (4 nos) on both ends proposed by RRVPNL).

6. Based on the above, the finalized scope of works of RRVPNL's proposal is given as under:-

SL No.	Transmission System covered under Power Evacuation Scheme of Solar & New Wind Power Plants	Route Length (in kM)
1.	400/220 kV, 3 X 500 MVA and 220/132kV, 3x160 MVA with 132/33kV, 2x40/50 MVA Pooling Sub-Station GSS at Ramgarh (Jaisalmer) alongwith 400kV, 1x125 MVAR, 400kV Shunt Reactor (Bus type) and 2x50 MVAR Shunt Reactor (line type) for 400kV D/C Ramgarh-Bhadla line	-
2.	400/220 kV, 3 X 315 MVA and 220/132kV, 3x160 MVA with 132/33kV, 2x40/50 MVA Pooling Sub-Station GSS at Bhadla (Jodhpur) alongwith 400kV, 1x125 MVAR Shunt Reactor (Bus type) and 4x50 MVAR, 400kV Shunt Reactors (Line type) for Bhadla ends of 400kV D/C Bhadla-Bikaner line, 400kV LILO Jodhpur-Merta at Bhadla.	-
3.	Augmentation of 400kV GSS Akal by installation of 400/220 kV, 1 X 500 MVA Transformer alongwith 400kV, 2x50 MVAR Shunt Reactor (line type) for proposed 400kV Akal-Jodhpur (New) D/c line, and 1x125 MVAR 400 kV Bus Reactor.	-

4.	Augmentation of 400kV GSS Jodhpur (New)	
(i)	2x50 MVAR, 400kV Shunt Reactor (line type) at 400kV GSS Jodhpur (New) for 400kV D/C Akal-Jodhpur(New) line	
(ii)	400kV bays at Jodhpur (New) for LILO of both ckt. of 400kV D/C Raj West LTPS-Jodhpur line.	
5.	Augmentation at 400kV GSS Barmer	
(i)	1x125 MVAR, 400kV Shunt Reactor (Bus type) at 400kV GSS Barmer	
(ii)	400kV bays for 400kV D/C Barmer-Bhinmal (PG) line	
6.	Augmentation at 400kV GSS Bikaner	
(i)	400kV Bays for 400kV D/C Bhadla-Bikaner line and 400kV D/C Bikaner-Sikar (PGCIL) line at Bikaner end of the lines	
(ii)	1x125 MVAR, 400kV Shunt Reactor (Bus type) at 400kV GSS Bikaner	
7	400kV Interconnecting Lines :	
(i)	400 kV D/C Ramgarh(Jaisalmer)-Akal (Jaisalmer) line (Twin Moose)	90
(ii)	400 kV D/C Ramgarh-Bhadla line (Twin Moose)	180
(iii)	400 kV D/C Bhadla-Bikaner line (Quad Moose)	180
(iv)	400 kV D/C line from 400/220kV Pooling Station Bhadla to LILO point at 400kV S/C Jodhpur-Merta line (Twin Moose)	160
(v)	400 kV D/C Bikaner-Sikar (PGCIL) line (Twin Moose)	210
(vi)	400 kV D/C Barmer-Bhinmal (PGCIL) line (Twin Moose)	140
(vii)	LILO of both circuits of 400kV D/C Raj West-Jodhpur line at 400kV GSS Jodhpur (New) (Twin Moose)	20
(viii)	400kV D/C Akal-Jodhpur (New) line (Quad Moose)	240
8.	220kV GSS at Bap and associated lines:	
(i)	220/132kV, 2x160 MVA & 132/33kV, 2x40/50 MVA GSS at Bap (Distt. Jodhpur)	-
(ii)	LILO of 220kV Barsingsar LTPS-Phalodi line at at Bap	25
(iii)	220kV D/C Bap-Bhadla line.	90
9.	220kV GSS at Kanasar and associated lines:	
(i)	220/132kV, 2x160 MVA & 132/33kV, 2x40/50 MVA GSS at Kanasar (Distt. Jodhpur)	-
(ii)	220kV D/C Bhadla- Kanasar line	25

(iii)	LILO of 132kV PS1-PS2 line at proposed 220kV GSS at Kanasar	12
(iv)	LILO of 132kV PS2-PS3 line at proposed 220kV GSS at Kansar	10
10.	Up-gradation of PS No. 2 to 132kV Grid Substation with 132/33kV, 2x20/25 MVA Transformers with associated 132kV line	-
11.	Up-gradation of PS No. 3 to 132kV Grid Substation with 132/33kV, 2x20/25 MVA Transformers	-
12.	Charging of 132 kV line from PS_No.5 to PS_No.1 on 132 kV voltage level via 132 kV PS_No.2 GSS , 132 kV PS_No.3 GSS and 132kV PS_No.4 GSS	-
13.	Up-gradation of PS No. 4 to 132kV Grid Substation with 132/33kV, 2x20/25 MVA Transformers	-

7. The total cost provision of Rs 2349.11 Crs has been made in proposal submitted by RRVPNL. We are of the opinion that cost implication of the minor modifications recommended as above, would be minimal and therefore the total cost provision of Rs. 2349.11 Crs is recommended for above project.

8. It may be noted that above transmission proposal of RRVPNL envisages interconnection with ISTS system of Powergrid at 400 kV ,Sikar S/s and Bhinmal S/s and requires provision of 2 nos 400 kV line bays at each substation. This issue will be taken up in the next Standing Committee Meeting of Power System Planning of NR for the concurrence of the NR constituents.

9. RRVPNL has confirmed the following technical requirements pertaining to upcoming wind generators seeking grid connectivity :-
   a) Wind generators connected shall maintain the power factor in the range of 0.99 to 1.0
   b) Wind generators shall have fault ride through capability and will not trip during voltage collapse due to fault and continue to generate during fault for minimum of 300 ms or fault clearing time which ever is less.

(B.K.Sharma) 16/6/11
Director

Copy for information to:-

1. Shri L.N. Nimawat,SE(P&P), RRVPNL,Vidyut Bhawan Jyoti Nagar, Janpath, Jaipur , Rajasthan — 302005

2. Shri Y.K.Sehgal , ED(SEF,CE&IT), PGCIL, Saudamini, Plot No- 2, Sector -29, Gurgaon-122001 (Haryana)

RAJASTHAN RAJYA VIDYUT PRASARAN NIGAM LTD.

(Regd. Office: Vidyut Bhawan, Jan Path, Jyoti Nagar, Jaipur - 302 005)
E Mail : [illegible] Tel 2740121, Fax: 2740794

No. RVPN/SE(P&P)/XEN(Proj.)/AE-1/ F. 528 /D. *Jaipur, Dt.*

The Chief Engineer (T&C/Civil/MM/LD),
Rajasthan Rajya Vidyut Prasaran Nigam Ltd.,
JODHPUR.

The Superintending Engineer (400kV Design/ 400kV Purchase),
Rajasthan Rajya Vidyut Prasaran Nigam Ltd.,
JAIPUR.

Sub: Approval of Supplementary Transmission System for New Solar and Wind Power Plants in Jaisalmer, Barmer, Jodhpur & Bikaner Districts.

The Board of Directors of RVPN in its 201st meeting held on 2nd December,11 have accorded its Administrative & Financial approval of proposed Supplementary Transmission System for New Solar and Wind Power Plants in Jaisalmer, Barmer, Jodhpur & Bikaner Districts at an aggregated estimated cost of Rs. 1485.46 Crores (including IDC) as per details given below:

(Rs. In lacs.)

S. No.	Supplementary Transmission System for Power Evacuation Scheme of Solar Power Projects in Jaisalmer, Barmer, Jodhpur and Bikaner Districts	Route Length (in km)	Estimated Cost (including IDC)
1	400/220 kV, 2 X 500 MVA GSS at Jaisalmer-2## alongwith 1x125 MVAR , 400kV Bus Type Reactor	-	19379.76
2	400 kV D/C Jaisalmer-2 -Barmer line	130	13498.12
3	400 kV S/C Akal(1)- Jaisalmer-2 line	50	3516.61
4	400kV Terminal Bay Equipment at 400/220kV GSS Barmer (for termination of 400 kV D/C Jaisalmer 2 - Barmer line at Barmer end)	-	3619.21
5	400kV Terminal Bay Equipment at 400/220kV GSS Akal 1 (for termination of 400 kV S/C Akal 1 - Jaisalmer 2 line at Akal 1 end)	-	1820.11
6	220kV GSS at Badisid (near Bap) (Jodhpur Distt.) :		
	(i) (a) 220/132 KV, 1x160 MVA and 132/33kV, 1x20/25 MVA GSS at Badisid		4963.68
	(b) 2 Nos. 220kV bays at 220kV GSS Bap		224.14
	(ii) 220 KV D/C Badisid-Bap (U/C 220 KV GSS) line	15	698.37
	(iii) 220 KV D/C Badisid-Aau (Proposed 220 KV GSS) line	50	2327.91
7	220kV GSS at Aau (New loc.) (Jodhpur Distt.):		
	(i) (a) 220/132 KV, 1x160 MVA and 132/33kV, 1x20/25 MVA GSS at Aau	-	5087.87
	(b) 2 Nos. 220kV bays at 220kV GSS Baithwasia		224.14
	(ii) 220 KV D/C Aau-Baithwasia (U/C 220 KV GSS) line	40	1862.33
	(iii) LILO of existing 132 KV S/C Aau(132 KV GSS)-Phalodi line at proposed 220 KV GSS Aau	5	154.27
8	220 KV GSS at PS_1(New location other than PHED s/s) / Bajju (New location) (Bikaner Distt.):		

Letter_for_conveying_Board_s_approval

	(i) (a) 220/132 KV 1x160 MVA and 132/33kV, 1x20/25 MVA GSS at PS_1(New location) / Bajju (New location) $		4921.26
	(b) 2 Nos 220kV bays at 400/220kV GSS Bhadla	-	224.14
	(ii) 220 KV D/C PS_1 / Bajju -Bhadla (U/C 400 KV GSS) line	20	931.16
	(iii) LILO of existing 132 KV S/C PS1-Bajju line at proposed 220 KV GSS PS_1 / Bajju	10	308.54
9	**220 KV GSS at Ramdev Nagar (Near Phalodi) (Jodhpur Distt.):**		
	(i) 220/132 KV, 1x160 MVA and 132/33kV, 1x20/25 MVA GSS at Ramdev Nagar (Phalodi)		4695.60
	(ii) LILO of one circuit of U/C 220 KV D/C Dechu-Phalodi line at proposed 220 KV GSS Ramdev Nagar	5	232.79
10	**220 KV GSS at Chatrail (Jaisalmer Distt.):**		
	(i) (a) 220/132 KV, 1x160 MVA and 132/33kV, 1x20/25 MVA GSS at Chatrail (Jaisalmer)	-	4741.94
	(b) 2 Nos. 220kV bays at 220kV GSS Ramgarh (400kV GSS)	-	224.14
	(ii) 220 KV D/C Chatrail-Ramgarh (U/C 400 KV GSS) line	60	2793.49
11	**220 KV GSS at Pokaran (New loc.) (Jaisalmer Distt.):**		
	(i) 220/132 KV, 1x160 MVA and 132/33kV, 1x20/25 MVA GSS at Pokran (New loc.)	-	5133.01
	(ii) LILO of both circuits of U/C 220 KV D/C Ramgarh GTPP – Dechu line at Pokaran (5kM D/C each x 2 = 10kM D/C)	10	465.58
	(iii)LILO of existing 132 KV S/C Chandan-Pokaran line at proposed 220 KV GSS Pokaran	10	308.54
12	**220 KV GSS at Kolayat (New loc.) (Bikaner Distt.):**		
	(i) (a) 220/132 KV, 1x160 MVA and 132/33kV, 1x20/25 MVA GSS at Kolayat (New loc.)	-	4921.26
	(b) 2 Nos. 220kV bays at 220kV GSS Gajner	-	224.14
	(ii) 220 KV D/C Gajner (U/C 220 KV GSS)-Kolayat line	15	698.37
	(iii)LILO of existing 132 KV S/C Kolayat-Bajju line at proposed 220 KV GSS Kolayat	10	308.54
13	**LILO of 220kV D/C Ramgarh GTPS- Dechu line at 400kV Ramgarh:**		
	(i) LILO of both circuits of 220kV D/C Ramgarh GTPS- Dechu line at 400kV Ramgarh (1kM D/C each for both circuits i.e. total 2kM D/C)	2	641.81
14	**2 Nos., 132/33kV, 1x20/25 MVA Capacity Grid Sub-Stations alongwith approx. 25kM long 132kV D/C line (for each of 132kV GSS) in the periphery of 30kM around proposed 220kV GSSs at Badisid (Near Bap), Asu (New location), PS-1/Bajju (New Location), Ramdev Nagar (Phalodi), Chatrail (Ramgarh), Pokaran (New location), Kolayat (New location), Kanasar, Bap and Bhadla (400/220kV) (location of 132kV GSS to be identified later on in consultation with field officers of RVPN/RREC).** **[TOTAL: 20 Nos. 132kV GSSs with approx. 25kM long 132kV D/C line associated with each of 20 nos. 132kV GSS i.e. total 132kV line length= 500kM]**		
(i)	500kM long 132kV D/C lines for 20 Nos. 132kV GSS	25	15426.57
(ii)	20 nos.132/33kV, 1x20/25 MVA Capacity Grid Sub-Stations	-	42803.82
15	**Optical Fibre Cable System for 220kV & 132kV Schemes already approved under Main Transmission System for New Solar & Wind Power Plants (as per Appendix-IIB) & Smart Grid Applications.**		

Letter_for_conveying_Board_s_approval

	(i) 220kV Transmission Lines already approved under Main Transmission System for Solar & Wind Power Plants (Total Route length 140kM)	140	902.54
	(ii) 132kV Transmission Lines already approved under Main Transmission System for Solar & Wind Power Plants (Total Route length 22kM)	22	141.63
	(iii) Software Development for Integration/Innovation, Smart Grid Applications etc.	-	128.93
	TOTAL PROJECT COST		148548.14
	Say Rs. (including IDC)= 1485.48 Crores		
## New 400kV GSS at Jaisalmer i.e. Jaisalmer-2 (location to be decided at a distance 30-50 kms from 400 kV Akal GSS).			
$ - 220 kV GSS at PS_1(New location other than PHED s/s) / Balu (New location)			

Project Report of the above scheme will be circulated separately alongwith various scheme code and project code.

— Sd/ —

(S.K. Jain)
Chief Engineer (PPM)

Copy to the following for information & necessary action :-

1. The Director (Technical), RREC, E-166 Yudhisthir Marg, C-Scheme, Jaipur.
2. The Chief Controller of Accounts, RVPN, Jaipur.
3. The Chief Engineer (NPP&R/T & Trg.),RVPN, Jaipur.
4. The Secretary (Admn.), RVPN, Jaipur.
5. The Superintending Engineer (400kV GSS/ TCC-IV), RVPN, Jodhpur.
6. The Superintending Engineer (SSPC/TLPC/PLCC), RVPN, Jaipur.
7. The TA to CMD, RVUN, Jaipur for kind information of the CMD, RVUN.
8. The TA to Director (Technical), RVPN, Jaipur. (without project report).
9. The Land Acquisition Officer, RVPN, Jaipur.(without project report).
10. The Company Secretary, RVPN, Jaipur (without Project Report) (Item No. 201.6 of BOD).
11. The Executive Engineer (PSS/Monitoring), RVPN, Jaipur. (without project report).

— Sd/ —
Chief Engineer (PPM)

Letter_for_conveying_Board_s_approval

Supplementary Transmission System for New Solar and Wind Power Plants in Jaisalmer, Barmer, Jodhpur & Bikaner Districts

1.0 Need of Supplementary Transmission System for Evacuation of Power from Wind & Solar Power Projects

Joint Secretary MNRE vide letter dated 13-7-2011, which has been endorsed by the Secretary Energy, GoR, Jaipur vide letter dated 25-7-2011(Appendix-I) has requested to plan a separate proposal for developing transmission network for connecting certain nodal points around which Solar Power Projects are located with the State /National grid, so that the developers of the project do not require to construct long transmission lines separately for each project.

The justification of requirement of additional transmission system which would be dovetailed with the already approved transmission system has been discussed in the following paragraphs:-

2.0 Approved transmission system for Evacuation of Power from Wind & Solar Power Projects which is under construction

For planning the approved Transmission System, the following generation schedule of proposed Wind & Solar Power Project has been considered in the load flow studies for condition corresponding to FY 2013-14, based on the data provided by the RREC:-

Non-Conventional Energy Sources	Jaisalmer/Barmer Area	Jodhpur Area	Total
Wind Farm Projects	2300 MW 1500 MW IC has been lumped at 400 kV Akal GSS & 220 kV Amarsagar GSS 800 MW IC has been lumped at approved 400 kV Ramgarh GSS	200 MW 200 MW IC has been lumped at approved 400 kV Bhadla GSS	2500 MW
Solar Power Plants	400 MW 400 MW IC has been lumped at approved 400 kV Ramgarh GSS	1340 MW 300 MW IC has been lumped at approved 400 kV Bhadla GSS 200 MW IC has been lumped at approved 220 kV Kanasar GSS 400 MW IC has been lumped at approved 220 kV Bap GSS 440 MW IC has been lumped at existing/approved 132 kV GSS at PS_No.1 to PS_No 5	1740 MW
Total (Solar + Wind)	**2700 MW**	**1540 MW**	**4240 MW**

The above solar/wind generation were lumped at either 132 kV bus or 220 kV bus at the Grid substations nearest to the potential sites. The criterion of lumped generation was considered because it was assumed that Solar/Wind developers would connect their generators /pooling sub- station with the Grid substations of RVPN.

1

Based on the above anticipated generation available during FY 2013-14, the following GSS were planned and approved:

S. No.	Name of sub-station	Nos/ MVA
A	400/220 kV GSS	2 Nos/ 2945 MVA
B	220/132 kV GSS	2 Nos. /1600 MVA
C	132/33 kV GSS	3 Nos/ 550 MVA

Details of approved Transmission System is placed at Appendix-II.

3.0 Planning for Supplementary Transmission System for Evacuation of power from Proposed Solar and Wind Power Projects in Jaisalmer, Barmer, Jodhpur and Bikaner districts

Background for planning Supplementary Transmission System :

Under the scenario where the Solar/ Wind Developers may be required to lay short inter-connecting lines viz 10-30 kms, RVPN would have to extend their transmission network to the Solar/Wind Developer's proposed pooling sub-stations and generators.

In order to identify new locations for Grid Sub-stations, under planning of the supplementary transmission network, the Solar /Wind Potential sites have been identified.

Solar/Wind Potential Sites:

The major potential of Wind Power projects is in Jaisalmer district near 400 kV GSS Akal, 220 kV GSS Amarsagar and 400 kV GSS Ramgarh.

Solar power projects are distributed with major potential sites being in Jodhpur, Jaisalmer, Bikaner & Barmer districts. Following are the district-wise tentative potential sites for Solar Power Projects (which has been based on information provided by RERC in reference to Solar Developers seeking grid connectivity for their Solar power projects at above districts).-

S. No.	Name of Districts	Major Villages	Potential of Solar Power Projects (Tentative)
1	Jodhpur (Appendix-IIIA)	Bap, Badisid, Badidhani, Kanasar, Aau, Osian, Bhadla, Malar, Ramdev nagar Phalodi, Neva & Bodana	4381 MW
2	Jaisalmer (Appendix-IIIB)	Pokaran, Chandan, Undoo, Chatrail, Issariyon ki Basti, Pargwar & Ramgarh	2325 MW
3	Bikaner (Appendix-IIIC)	Kolayat, Ladkan, Gurha, Gajner, Bithnok & Pugal Road	685 MW
4	Barmer (Appendix-IIID)	Barmer	90 MW

Village wise list of Solar Power projects is placed at is placed at Appendix-IIIA to IIID

Methodology adopted for Planning of Supplementary Transmission System for evacuation from proposed Solar Power Projects

- The village which have been identified for having potential for Solar Power Projects (Appendix-IIIA to IIID), are approximately at a distance of 30-100 km away from the existing / approved Grid sub-stations. Therefore, during the planning of supplementary transmission system, emphasis was laid on proposing additional 220 kV Grid sub stations & 132 kV Grid sub stations vis-a-vis 33 kV sub-stations to inter-connect the Solar Developer's Pooling sub-stations or generators with existing/ approved Grid sub-stations.

- 7 Nos. 220 kV Grid sub-stations have been proposed in the villages which have huge Solar potential, which would be inter-connected through 220 kV D/C lines to already approved or existing transmission network.

- At each new 220 kV GSS, the voltage levels of 132 kV and 33 kV are also planned so that the inter connections with Solar Power Projects could be appropriately planned by the Developers.

- Further, in order to cover an area extended up to 30 kms around the approved 400 kV GSS and 220 kV GSS and new 220 kV GSS proposed under supplementary scheme, new 2 No. of 132 kV GSS have also been proposed. Accordingly, new 20 Nos. of 132 kV GSS have been proposed Each 132 kV GSS would be inter connected to approved 220 kV GSS or 400 kV GSS through 132 kV D/C line. The voltage levels of 132 kV or 33 kV have been proposed so that the Solar Developers can seek inter connection at appropriate voltage level.

Following is the abstract of proposed new supplementary Transmission System which has been proposed for Evacuation of Solar Power Projects from Jodhpur/Bikaner & Jaisalmer/Barmer Districts:-

Particulars	Sub Stations (Nos/MVA)	Trans. lines (kms)
220 kV GSS	7 (1120 MVA) Proposed Transformer Capacity : 1X160 MVA, 220/132 kV	217 kms (D/C)
132 kV GSS	20 (675 MVA*) * Inclusive of 132/33 kV transformer capacity installed at proposed 220 kV GSS Proposed Transformer Capacity : 1x20/25 MVA, 132/33 kV at 220 kV GSS 1x20/25 MVA, 132/33 kV at 132 kV GSS	535 kms (D/C)

Details of Supplementary Transmission System which would be required to provide the connectivity to propose Solar Power Projects located in the Jaisalmer/Barmer & Jodhpur/Bikaner districts is placed at Appendix-IVA.

Since the Solar Power Projects would be developed in a phased manner, therefore, the above proposed supplementary and the already approved transmission system would also develop in a phased manner.

Depending on the quantum of injection from the solar power projects, the execution/commissioning of the proposed GSS and transmission line would take place, which could also involve commissioning of the GSS and associated transmission lines on lower voltage levels.

Criteria adopted for Planning of Supplementary Transmission System for Evacuation of power from Proposed Wind Power Projects

The major potential of Wind Power projects is in Jaisalmer district near existing 400 kV GSS Akal, 220 kV GSS Amarsagar and approved 400 kV Ramgarh GSS. Upto FY 2013-14, connectivity for approx 1500 MW capacity Wind Farms has been sought at 400 kV GSS Akal. Space for 20 Nos. 220 kV feeder bays has already been provided at 400/220 kV GSS Akal. Since further interconnections would not be feasible, the extention of existing 400 kV GSS to new 400 kV GSS would be required in Jaisalmer. Therefore, a new 400 kV GSS at Jaisalmer -2 at a distance of 50 km. from existing 400 kV GSS Akal has been proposed under supplementary scheme.

Following is the abstract of proposed new supplementary Transmission System which would be required to provide the connectivity to proposed Wind Power Projects located in the Jaisalmer district:-

Particulars	Sub Stations (Nos/MVA)	Trans. lines (kms)
400 kV GSS	1 (1000 MVA) Proposed Transformer Capacity : 2X500 MVA, 400/220 kV	130 kms (D/C) 50 kms (S/C)

Details of Supplementary Transmission System which would be required to provide the connectivity to proposed Wind Power Projects located in the Jaisalmer district is placed at Appendix-IVB.

Single line diagram of Supplementary Transmission System for Evacuation of power from Proposed Solar & Wind Power Projects is placed at Exhibit-1

Criteria adopted for Planning of 33 kV System for evacuation from proposed Solar Power Projects

5 nos or 3 Nos of 33/11 kV Sub-stations (to be identified later on in consultation with field officers of RVPN and Jodhpur Discom) in the periphery of 10 kms around approved/proposed RVPN's 220 kV GSS and 132 kV GSS respectively located in Jaisalmer, Jodhpur and Bikaner and connected through 33 kV S/C line on Panther/Dog conductor.

SNo.	Existing/Approved/Proposed GSS of RVPN	Number of 33/11 kV S/S, MVA/ckt kms
A	**Existing GSS**	
1	132 kV PS_No.1 GSS	3 Nos./ 15 MVA/ 30 kms
2	132 kV PS_No.5 GSS	3 Nos./ 15 MVA/ 30 kms
B	**Approved GSS**	
1	220 kV Bap GSS	5 Nos./ 25 MVA/ 50 kms
2	220 kV Kanasar GSS	5 Nos./ 25 MVA/ 50 kms
3	132 kV PS_No.2 GSS	3 Nos./ 15 MVA/ 30 kms
4	132 kV PS_No.3 GSS	3 Nos./ 15 MVA/ 30 kms
5	132 kV PS_No.4 GSS	3 Nos./ 15 MVA/ 30 kms
C	**Proposed GSS**	
1	7 Nos. of 220 kV GSS	35 Nos./175 MVA/ 350 kms
2	20 Nos. of 132 kV GSS	60 Nos./300 MVA/600 kms
	Total 33/11 kV S/S	**120 Nos./ 600 MVA/ 1200 kms**

The approval & execution of above proposed 33/11 kV sub-stations along with associated lines would be taken separately by DISCOMs.

4.0 LOAD FLOW STUDIES

Load flow studies have been carried out for the condition corresponding to 2013-14 for the total system load 13047 MW with new supplementary transmission system placed at Appendix-IVA & IVB. Generation schedule for the condition corresponding to 2013-14 is placed at **Appendix-VA & VB**. In 13047 MW total system load, Rajasthan system load is 10047 MW & remaining 3000 MW load has been considered at Zerda (7500 MW at 400 kV bus), Sikar (750 MW at 400 kV bus) & Phagi-765 kV GSS (1500 MW at 765 kV bus). Power plots of the load flow study are placed at **Exhibit-2A&2B**.

5.0 OBSERVATIONS

Power plots of load flow studies are placed at respective **Exhibits 2A & 2B**. Power flow on some transmission lines and transformers for the condition corresponding to FY 2013-14 has been tabulated at **Appendix-VI**. Load flow studies indicate that proposed transmission system is sufficient to evacuate the additional power from the Wind Farm and Solar. The contingency cases have not been considered on account of the diversity available in the Solar/Wind generation.

6.0 TENTATIVE ESTIMATED COST

Tentative Estimated Cost of new Supplementary Transmission System- RS 900 crores (excluding IDC) and Rs. 990 crores (including IDC).

7.0 CONCLUSION

On the basis of load flow studies supplementary transmission system, placed at **Appendix-IVA & IVB** is proposed at an **Tentative Estimated Cost** of Rs. 900 crores (excluding IDC) and Rs. 990 crores (including IDC) to provide the connectivity new Solar & Wind farms power plants located in Jodhpur, Jaisalmer, Bikaner and Barmer districts for condition corresponding to FY 2013-14.

Naresh Pal Gangwar
IAS
Chairman & Managing Director

PS/CMD/T/RR. 2714
Date 25-7-2011
Appendix-1

Rajasthan Renewable Energy Corporation
E-166, Yojna Bhawan Marg, C-Scheme, JAIPUR - 302 001

D (Tech)

5 JUL 2011

D.O. No. RREC/Solar/RVPN/D-6037
Dated 25/7/11

Dir. (Tech.) RVPN
R.R.No. 1345
Date 25.7.11

Respected Sir,

I am enclosing a copy of of DO letter No.29/5(2)/2011-12/JNNSM(ST) dated July 13, 2011 received from Joint Secretary, MNRE, Govt. of India regarding preparation of project for evacuation of solar power from the power plants expected to be commissioned in desert region of Rajasthan. You are aware that a project of Rs 2700 crores has already been sent to Govt. of India for sanction of grant from Green Energy Fund set up at National level. MNRE has already recommended this project for sanction of grant of approximately Rs.2400 crores. Now Joint Secretary MNRE has requested for an additional proposal for developing transmission network for connecting certain nodal point around which solar power projects are located with the State/National grid so that the Developers of the project do not require to construct long transmission lines separately for each project. Further, Joint Secretary MNRE has also mentioned with these systems could be at lower voltage.

In view of above, you are requested to have another project prepared by RVPNL in consultation with RREC, and send to MNRE, Govt. of India for sanction.

With best wishes & regards,

Yours Sincerely,

(Naresh Pal Gangwar)

Shri Shailendra Agarwal, IAS
Chairman & Managing Director,
Rajasthan Vidyut Prasaran Nigam Ltd.,
Jaipur

C/o S. E. (P&P) JAIPUR
R. R. No. 2452
Date
KBN/JVVNL/MONIT/
(R. ACCRISTY/ASST. ( )

DS (P&P) SE (P&P)

Phone : 0141-2225659, Fax : 2226078, E-mail : rrec.jai@yahoo.co.in

(5)

भारत सरकार
नवीन और नवीकरणीय ऊर्जा मंत्रालय
GOVERNMENT OF INDIA
MINISTRY OF NEW AND RENEWABLE ENERGY

Tarun Kapoor, IAS
Joint Secretary

No 29/5/2/2011-12/JNNSM(ST) July 13, 2011.

Subject : Proposal of Rajasthan for funding intra-state power evacuation projects for their upcoming Renewable Energy Generation Projects

Dear Naresh,

Please refer to your proposal for strengthening transmission system in Rajasthan submitted to this Ministry. While this proposal is being considered, we would like to point out that the proposal submitted by you covers strengthening of only 132 KV and above and is not taking the transmission lines closer to the Solar Power Projects. You may, therefore, consider sending a separate proposal for developing a transmission network for connecting certain nodal points around which Solar Power Projects are coming up with the State and National grids, so that the developers of power project do not have to construct long transmission lines separately for each project, thereby reducing cost of the project and also reducing the network of transmission lines in the area. These systems could be at lower voltages and could also be constructed by distribution companies.

With regards,

Yours sincerely,

(Tarun Kapoor)

Shri Naresh Pal Gangwar,
Secretary (Energy),
Government of Rajasthan
Jaipur 302 005

Block No. 14, CGO Complex, Lodi Road, New Delhi - 110 003
Tel : +91-11-24360359 • Fax : +91-11-24357861 • E-mail : tarun.kapoor@nic.in

(6)

APPENDIX-II

Approved Transmission System for New Solar and Wind Power Plants in Jaisalmer, Barmer & Jodhpur Districts (Total Project cost : 2914.89 Crores)

The Board of Directors of RVPN in its 195th meeting held on 28th April, 2011 have accorded its revised administrative and financial approval for proposed Transmission System for Evacuation of Power from New Solar and Wind Power Plants in Jaisalmer, Barmer & Jodhpur Districts at an aggregated estimated cost of Rs. 2914.89 Crores (Including IDC) as per details given below:

(' In lacs.)

S. No	Transmission System covered under Power Evacuation Scheme of Solar & New Wind Power Plants	Route Length (in kM)	Earlier Approved Cost	Revised Estimated Cost (including IDC)		
				Total	Under Phase-I	Under Phase-II
1	400/220 kV, 3 X 315 MVA and 220/132kV, 3x160 MVA with 132/33kV, 2x40/50 MVA Pooling Sub-Station GSS at Ramgarh (Jaisalmer) alongwith 400kV, 1x125 MVAR, 400kV Shunt Reactor (Bus type) and 2x50 MVAR Shunt Reactor (line type) for 400kV D/C Ramgarh-Bhadla line	-	24287.32	29263.38	23941.04	5322.34
2	400/220 kV, 3 X 315 MVA and 220/132kV, 3x160 MVA with 132/33kV, 2x40/50 MVA Pooling Sub-Station GSS at Bhadla (Jodhpur) alongwith 400kV, 1x125 MVAR Shunt Reactor (Bus type) and 6x50 MVAR, 400kV Shunt Reactors (Line type) for Bhadla ends of 400kV D/C Bhadla-Bikaner line, 400kV LILO Jodhpur-Merta at Bhadla line and 400kV D/C Ramgarh-Bhadla line.	-	28936.11	34308.43	30489.27	3819.16
3	Augmentation of 400kV GSS Akal by installation of 400/220 kV, 1 X 315 MVA Transformer alongwith 400kV, 2x80 MVAR Shunt Reactor (line type) for proposed 400kV Akal-Jodhpur (New) line.	-	7794.45	7794.45	7794.45	0
4	Augmentation of 400kV GSS Jodhpur (New)					
(i)	2x80 MVAR, 400kV Shunt Reactor (line type) at 400kV GSS Jodhpur (New) for 400kV D/C Akal-Jodhpur(New) line		4220.4	4220.40	4220.40	0
(ii)	400kV bays at Jodhpur (New) for LILO of both ckt. of 400kV D/C Raj West LTPS-Jodhpur line.					
5	Augmentation at 400kV GSS Barmer	-	3177.51	3177.51	3177.51	0
(i)	1x125 MVAR, 400kV Shunt Reactor (Bus type) at 400kV GSS Barmer					
(ii)	400kV bays for 400kV D/C Barmer-Bhiramal (PG) line					
6	Augmentation at 400kV GSS Bikaner	-				
(i)	2x50 MVAR, 400kV Shunt Reactor (Line type) at 400kV GSS Bikaner for Bikaner end of 400kV D/C Bhadla-Bikaner line		8082.3	8082.30	8082.30	0
(ii)	2x50 MVAR 400kV Shunt Reactor (Line type) at at both ends of 400kV D/C Bikaner-Sikar (PGCIL) line (Twin Moose)					
(iii)	400kV Bays for 400kV D/C Bhadla-Bikaner line and 400kV D/C Bikaner-Sikar (PGCIL) line at Bikaner end of the lines					

(7)

7	400kV Interconnecting Lines :	-				
(i)	400 kV D/C Ramgarh(Jaisalmer)-Akal (Jaisalmer) line (Twin Moose)	90	9413.66	8939.05	8939.05	0
(ii)	400 kV D/C Ramgarh-Bhadla line (Twin Moose)	160	18622.37	17873.13	17873.13	0
(iii)	400 kV D/C Bhadla-Bikaner line (Quad Moose)	180	38421.51	42589.27	42589.27	0
(iv)	400 kV D/C line from 400/220kV Pooling Station Bhadla to LILO point at 400kV S/C Jodhpur-Merta line (Twin Moose)	160	16731.55	15887.78	15887.78	0
(v)	400 kV D/C Bikaner-Sikar (PGCIL) line (Twin Moose)	210	21958.81	20651.16	20651.16	0
(vi)	400 kV D/C Barmer-Bhinmal (PGCIL) line (Twin Moose)	140	14640.72	13902.43	13902.43	0
(vii)	LILO of both circuits of 400kV D/C Raj West-Jodhpur line at 400kV GSS Jodhpur (New) (Twin Moose)	20	2095.78	1990.32	1990.32	0
(ix)	400kV D/C Akal-Jodhpur (New) line (Quad Moose)	240	51227.03	58784.04	58784.04	0
8	220kV GSS at Bap and associated lines.					
(i)	220/132kV, 2x160 MVA & 132/33kV, 2x40/50 MVA GSS at Bap (Distt. Jodhpur)	-	8358.26	10977.17	10977.17	0
(ii)	LILO of 220kV Barsingsar LTPS-Phalodi line at at Bap	25				
(iii)	220kV D/C Bap-Bhadla line	90				
9	220kV GSS at Kanasar and associated lines:		7540.87	7914.83	7914.83	0
(i)	220/132kV, 2x160 MVA & 132/33kV, 2x40/50 MVA GSS at Kanasar (Distt. Jodhpur)	-				
(ii)	220kV D/C Bhadla- Kanasar line	25				
(iii)	LILO of 132kV PS1-PS2 line at proposed 220kV GSS at Kanasar	12				
(iv)	LILO of 132kV PS2-PS3 line at proposed 220kV GSS at PS No.1/PS No 2	10				
10	Up-gradation of PS No. 2 to 132kV Grid Substation with 132/33kV, 2x20/25 MVA Transformers with associated 132kV line	-	2230.65	2228.01	2228.01	0
(i)	LILO of 132kV PS No. 1-PS No.2 line at 220kV PS NO.1/PS No. 2	10				
11	Up-gradation of PS No. 3 to 132kV Grid Substation with 132/33kV, 2x20/25 MVA Transformers	-	1999.31	1993.12	1993.12	0
12	Charging of 132 kV line from PS_No.5 to PS_No.1 on 132 kV voltage level via 132 kV PS_No.2 GSS , 132 kV PS_No 3 GSS and 132kV PS_No.4 GSS	-	567.81	718.88	718.88	0
13	Up-gradation of PS No. 4 to 132kV Grid Substation with 132/33kV, 2x20/25 MVA Transformers	-	-	1993.12	1993.12	0
	TOTAL PROJECT COST		270506.46	291456.76	282347.26	9141.50
	Say ` Crores		2705.06	2914.89	2823.47	91.42

78

Note: 1. Since the new Solar Power Plants and Wind Power Plants in Jaisalmer, Barmer and Jodhpur area would be commissioned in a phased manner over a period of 2-3 years, therefore, the new associated transmission system which would be developed for power evacuation from these plants would also be commissioned in a phased manner. It is proposed that initially the 400 kV transmission lines at 400 kV Ramgarh GSS and 400 kV Bhadla GSS would be constructed and commissioned on 220 kV voltage level and at a later stage, when sufficient generation to the order of 700-1000 MW would be available at 400 kV Ramgarh GSS and 400 kV Bhadla GSS, the associated 400 kV GSSs would be commissioned.

Note: 2. Execution in First Phase: 2nos. Transformers of each level (i.e. 400/220kV, 220/33kV and 132/33kV) at Ramgarh and Bhadla, 4 nos. 400kV bays at Ramgarh and 6 nos. 400kV bays at Bhadla, 6 nos. 220kV, 6 nos. 132kV and 6 nos. 33kV bays each at Ramgarh and Bhadla.

Note: 3. Turnkey Execution: 400/220kV transmission system under the scheme shall be executed on Turnkey basis.

Note: 4. The 220kV and 132kV GSSs under the above scheme are for power evacuation from Wind & Solar power plants therefore, these shall not be included under normal targets of EHV GSSs.

A meeting was convened in CEA on 15.06.2011 with representatives of PGCIL, RRVPNL and MNRE to discuss the 2914.89 Crores approved project report for evacuation of power from Wind and Solar power projects. After detailed deliberations in the meeting, Director(SP&PA), CEA, New Delhi vide letter no. 925 dated 16-6-2011 has proposed following modifications, in respect to reactors & transformers capacity in the approved proposal of new Solar and Wind Power plants in Jaisalmer, Barmer & Jodhpur Districts.

Change in the 400 kV Reactors Capacity:-

Name of 400 kV Substation	Approved in the Project Report		Revised Approval Required (As per CEA's Proposal)	
	Line Reactors	Bus Reactors	Line Reactors	Bus Reactors
Ramgarh	2 x 50 MVAR	1 x 125 MVAR	2 x 50 MVAR	1 x 125 MVAR
Bhadla	6 x 50 MVAR	1 x 125 MVAR	4 x 50 MVAR	1 x 125 MVAR
Akal	2 x 80 MVAR	-	2 x 50 MVAR	1 x 125 MVAR
Jodhpur(New)	2 x 80 MVAR	-	2 x 50 MVAR	-
Bikaner	4 x 50 MVAR	-	-	1 x 125 MVAR
Barmer	-	1 x 125 MVAR	-	1 x 125 MVAR
Merta	-	-	1 x 50 MVAR	-
Sikar(PG)	2 x 50 MVAR	-	2 x 50 MVAR	-

Change in the 400/220 kV Transformers Capacity:-

Name of 400 kV Substation	Approved in the Project Report	Revised Approval Required (As per CEA's Proposal)
Ramgarh	3 x 315 MVA	3 x 500 MVA
Bhadla	3 x 315 MVA	3 x 315 MVA
Akal	1 x 315 MVA	1 x 500 MVA

These modifications have been considered in the load flow studies.

9

Appendix-IIIA

VILLAGE WISE LIST OF PROPOSED SOLAR POWER PROJECTS IN JODHPUR DISTRICT

S. No.	Location of Solar Project	Agg. Capacity of proposed Solar Power Plants	Receiving Station (Approved)
1	Bap	405 MW	Proposed 220 kV GSS Bap
2	Badisid	455 MW	Proposed 220 kV GSS Bap
3	Bada Dhani	245 MW	Proposed 220 kV GSS Bap
4	Badi	5 MW	Proposed 220 kV GSS Bap
5	Bar Dhani	5 MW	Proposed 220 kV GSS Bap
6	Bagneri	5 MW	Proposed 220 kV GSS Bap
7	Badi sadri	5 MW	Proposed 220 kV GSS Bap
8	Bewari	100 MW	Proposed 220 kV GSS Bap
9	Khirwa	5 MW	Prop 220 kV GSS Bap
10	Machilla	20 MW	Prop 220 kV GSS Bap
11	Mandi-Kanasar	50 MW	Prop 220 kV GSS Bap
12	Mojo ki Bap	5 MW	Prop 220 kV GSS Bap
13	Sultan Nagar	125 MW	Prop 220 kV GSS Bap
14	Kanasar (Near to Bap)	110 MW	Proposed 220 kV GSS Bap
15	Naya Gaon	23 MW	Prop 220 kV GSS Bap
	Capacity of proposed Solar Power Projects to near by Bap village	**1448 MW**	
16	Indo ke Bas (Between Asu & Lohawat)	50 MW	132 kV GSS Lohawat & 132 kV GSS Asu
17	Natsara	25 MW	132 kV GSS Asu
18	Lohawat	5 MW	132 kV GSS Lohawat
19	Shaitan Singh Nagar	20 MW	132 kV GSS Lohawat (22 kms)
20	Naya Bera	10 MW	132 kV GSS Lohawat
21	Rawre	25 MW	132 kV GSS Lohawat
22	Amla	35 MW	220 kV GSS Phalodi &
	Capacity of proposed Solar Power Projects to near by Lohawat & Asu	**135 MW**	

S. No.	Location of Solar Project	Agg. Capacity of proposed Solar Power Plants	Receiving Station (Approved)
23	Bhadla	811 MW	Proposed 400 kV GSS Bhadla
	Capacity of proposed Solar Power Projects to near by Bhadla	**811 MW**	
24	Neva	440 MW	132 kV GSS PS_1
25	Beeta ka gaon	83 MW	132 kV GSS PS_1
26	Kansingh ki Sid	50 MW	132 kV GSS PS_1
27	Bodana	63 MW	132 kV GSS PS_1
28	Dhaleri	110 MW	132 kV GSS PS_1
29	Naukh	614 MW	132 kV GSS PS_1
	Capacity of proposed Solar Power Projects to near by 132 kV GSS PS_1	**1297 MW**	
27	Betwasia	25 MW	132 kV GSS Osian
28	Dhundiya	5 MW	132 kV GSS Osian
	Capacity of proposed Solar Power Projects to near by 132 kV GSS Osian	**30 MW**	
29	Dungar	15 MW	132 kV GSS Balesar
30	Kotu Kalan	5 MW	132 kV GSS Balesar
	Capacity of proposed Solar Power Projects to near by 132 kV GSS Balesar	**20 MW**	
31	Tinwari	45 MW	220 kV GSS Tinwari (4-5 KMS)
32	Gagari	5 MW	220 kV GSS Tinwari
	Capacity of proposed Solar Power Projects to near by 132 kV GSS Tinwari	**50 MW**	
33	Ramdev Nagar	255 MW	220 kV GSS Phalodi
34	Malar	115 MW	132 kV GSS PS_5
35	Hindalgol	50 MW	132 kV GSS PS_5
36	Roheda	50 MW	220 kV GSS Phalodi
	Capacity of proposed Solar Power Projects to near by Phalodi	**470 MW**	
37	Jellu Gagari	100 MW	132 kV GSS Chamu
38	Bhimji ka Gaon	20 MW	U/C 132 kV GSS PS_3
		120 MW	
	Capacity of proposed Solar Power Projects in Jodhpur District	**4361 MW**	

Appendix-III E

VILLAGE WISE LIST OF PROPOSED SOLAR POWER PROJECTS IN JAISALMER DISTRICT

S. No.	Location of Solar Project	Agg. Capacity of proposed Solar Power Plants	Receiving Station (Approved)
1	Chatrali	60 MW	400 kV GSS Ramgarh
2	Chhod	5 MW	400 kV GSS Ramgarh
3	Damodara & Dujasar	100 MW	400 kV GSS Ramgarh
4	Issaniyon Ki Basti	200 MW	400 kV GSS Ramgarh
5	Joga	155 MW	400 kV GSS Ramgarh
6	Khaderon Ki Dhani	5 MW	400 kV GSS Ramgarh
7	Khinyawas	55 MW	400 kV GSS Ramgarh
8	Kuchari	70 MW	400 kV GSS Ramgarh
9	Parewar	510 MW	400 kV GSS Ramgarh
10	Raghewa	55 MW	400 kV GSS Ramgarh
11	Ramgarh	50 MW	400 kV GSS Ramgarh
12	Sagna	5 MW	400 kV GSS Ramgarh
13	Sahuba	50 MW	400 kV GSS Ramgarh
14	Sontho ka Dhani	35 MW	400 kV GSS Ramgarh
	Capacity of proposed Solar Power Projects to be connected to 400 kV GSS Ramgarh	1200 MW	

S. No.	Location of Solar Project	Agg. Capacity of proposed Solar Power Plants	Receiving Station (Approved)
1	Bahala	10 MW	132 kV GSS Undoo
2	Bainsara	45 MW	132 kV GSS Undoo
3	Baja Basti	5 MW	132 kV GSS Undoo
4	Bhasda	5 MW	132 kV GSS Undoo
	Capacity of proposed Solar Power Projects to be connected to 132 kV GSS Undoo	**65 MW**	
1	Chandan	25 MW	132 kV GSS Chandan
2	Chandan	10 MW	132 kV GSS Chandan
3	Chandan	5 MW	132 kV GSS Chandan
4	Karma ki Dhani	10 MW	132 kV GSS Chandan
	Capacity of proposed Solar Power Projects to be connected to 132 kV GSS Chandan	**50 MW**	
1	Dhursar	125 MW	132 kV GSS Pokaran
4	Didanla	55 MW	132 kV GSS Pokaran
5	Eka	85 MW	132 kV GSS Pokaran
6	Gomat	60 MW	132 kV GSS Pokaran
7	Kenva	30 MW	132 kV GSS Pokaran
8	Lanwa	185 MW	132 kV GSS Pokaran
9	Namiyai	30 MW	132 kV GSS Pokaran
10	Paupadiya	10 MW	132 kV GSS Pokaran
11	Pokaran	400 MW	132 kV GSS Pokaran
12	Sujasar	15 MW	132 kV GSS Pokaran
14	That	40 MW	132 kV GSS Pokaran
15	Askandra	35 MW	132 kV GSS Pokaran
	Capacity of proposed Solar Power Projects to be connected to 132 kV GSS Pokaran	**1010 MW**	
	Capacity of proposed Solar Power Projects in Jaisalmer District	**2325 MW**	

Appendix-IIIC

VILLAGE WISE LIST OF PROPOSED SOLAR POWER PROJECTS IN BIKANER DISTRICT

S. No.	Location of Solar Project	Agg. Capacity of proposed Solar Power Plants	Receiving Station (Approved)
1	Kolayat	55 MW	132 kV GSS Kolayat
2	Ladkan	105 MW	132 kV GSS Kolayat
3	Gurna	110 MW	132 kV GSS Kolayat
4	Mandal Bhatiyan	50 MW	132 kV GSS Kolayat
5	R.G.Geelu Singh	5 MW	132 kV GSS Kolayat
6	Sarah Kiradu, Sarah Kulara, Salasar & Biyahimyani	50 MW	132 kV GSS Kolayat
7	Srhah Kishnayet	5 MW	132 kV GSS Kolayat
8	Chani & Akasar	25 MW	132 kV GSS Kolayat
9	Deh	5 MW	132 kV GSS Kolayat
10	Bhclasar	5 MW	132 kV GSS Kolayat
Capacity of proposed Solar Power Projects to near by 132 kV GSS Kolayat		365 MW.	
10	Gajner	45 MW	132 kV GSS Gajner
11	Patora Moda Mansar	50 MW	132 kV GSS Gajner
12	Sharbhiyanimani	5 MW	132 kV GSS Gajner
Capacity of proposed Solar Power Projects to near by 132 kV GSS Gajner		100 MW	
13	Bhenu Khera	10 MW	132 kV GSS Pugal Road
14	Surasar	50 MW	132 kV GSS Pugal Road
Capacity of proposed Solar Power Projects to near by 132 kV GSS Pugal Road		60 MW	
15	Bibanok	50 MW	132 kV GSS Bajju
16	Napasar	5 MW	132 kV GSS Napasar
17	Loonkarnsar	5 MW	132 kV GSS Loonkarnsar
Capacity of proposed Solar Power Projects in Bikaner District		685 MW	

Appendix-III D

VILLAGE-WISE LIST OF PROPOSED SOLAR POWER PROJECTS IN BARMER DISTRICT

Reg No.	Developer	Location of Solar Project		Installed Capacity	Receiving Station	Trans. Line	Remarks
		Village	District				
S/376/2004	M/s Indian Oil Corporation Ltd	Manudi	Barmer	5 MW	220/132 kV Barmer GSS	132 kV S/C on Panther conductor from Power Plant to Receiving station (~ 5kms)	Solar Photovoltaic PP Connectivity would be provided to the nearest technical feasible 132 kV or 220 kV GSS
S/64/2004	JSW Energy Ltd	Bhadresh	Barmer	5 MW	132 kV Barmer GSS		Solar PV Project
S/153/2004	M/s Facor Alloys Ltd.	Agora	Barmer	15 MW	132 kV Sheo GSS	33 kV S/C on Panther conductor from Power Plant to Receiving station (10.5 kms)	Solar PV Pro
S/239/2001	M/s Asia Pacific Commercialisation Associates Pvt. Ltd	Shiv	Barmer	5 MW	132 kV Sheo GSS		Solar PV Project
S/398/2004	M/s C.P. Systems Pvt. Ltd.	Patodi	Barmer	5 MW	220 kV Balotra GSS		Solar PV Project
S/09/2004	Relex Refrigerent Ltd.	Vituza	Barmer	5 MW	220 kV Balotra GSS	33 kV S/C on Panther conductor from Power Plant to Receiving station	It is a Solar Photovoltaic Grid connected PP The cost of the line will be borne by the Developer.
S/402/2004	M/s Sunkshi Energy Pvt. Ltd.	Sanwarda	Barmer	50 MW	132 kV Samdhari GSS	132 kV S/C on Panther conductor from Power Plant to Receiving station (10 kms)	Solar Thermal Project
Total Capacity of proposed Solar Projects in Barmer District				**90 MW**			

Appendix-IVA

Supplementary Transmission System for Evacuation of power from proposed Solar Power Projects in Jaisalmer, Barmer, Jodhpur and Bikaner districts

A. 220 KV & 132 KV System

1. 220 KV GSS at Badisid (near Bap) (Jodhpur Distt.)
   - (i) 220/132 KV, 1x160 MVA GSS at Badisid
   - (ii) 15 Km 220 KV D/C Badisid-Bap (U/C 220 KV GSS) line
   - (iii) 50 Km 220 KV D/C Badisid-Aau (Proposed 220 KV GSS) line
   - (iv) 132/33, 1x20/25 MVA transformers at proposed 220 KV GSS Badisid
   - (v) Additional 2 Nos. of 220 KV feeder bays, 6 Nos. of 132 KV feeder bays and 6 Nos. of 33 KV feeder bays for Wind / Solar developers
   - (vi) 2 nos. of 1x20/25 MVA,132/33 KV GSS alongwith 25 kM 132 kV 2xD/C lines (to be identified later on in consultation with field officers of RVPN/RREC in the periphery of 30 kms around proposed 220 KV GSS Badisid) with additional 2 Nos. of 132 KV feeder bays and 4 Nos. of 33 KV feeder bays at each new 132 KV GSS for Wind / Solar developers

2. 220 KV GSS at Aau(New loc.) (Jodhpur Distt.)
   - (i) 220/132 KV, 1x160 MVA GSS at Aau
   - (ii) 40 Km 220 KV D/C Aau-Baitwasia (U/C 220 KV GSS) line
   - (iii) 132/33, 1x20/25 MVA transformers at proposed 220 KV GSS Aau
   - (iv) 5 Km LILO of existing 132 KV S/C Aau(132 KV GSS)-Phalodi line at proposed 220 KV GSS Aau
   - (v) Additional 2 Nos. of 220 KV feeder bays, 6 Nos. of 132 KV feeder bays and 6 Nos. of 33 KV feeder bays for Wind / Solar developers
   - (vi) 2 nos. of 1x20/25 MVA,132/33 KV GSS alongwith 25 kM 132 kV 2xD/C lines (to be identified later on in consultation with field officers of RVPN/RREC in the periphery of 30 kms around proposed 220 KV GSS Aau) with additional 2 Nos. of 132 KV feeder bays and 4 Nos. of 33 KV feeder bays at each new 132 KV GSS for Wind / Solar developers

3. 220 KV GSS at PS_1(*New location other than PHED s/s*) / Bajju *(New location)* (Bikaner Distt.)
   - (i) 220/132 KV, 1x160 MVA GSS at PS_1 / Bajju
   - (ii) 20 Km 220 KV D/C PS_1 / Bajju -Bhadla (U/C 400 KV GSS) line
   - (iii) 132/33, 1x20/25 MVA transformers at proposed 220 KV GSS PS_1 / Bajju
   - (iv) Additional 2 Nos. of 220 KV feeder bays, 6 Nos. of 132 KV feeder bays and 6 Nos. of 33 KV feeder bays for Wind / Solar developers
   - (v) 10 Km LILO of existing 132 KV S/C PS1-Bajju line at proposed 220 KV GSS PS_1 / Bajju
   - (vi) 2 nos. of 1x20/25 MVA,132/33 KV GSS alongwith 25 kM 132 kV 2xD/C lines (to be identified later on in consultation with field officers of RVPN/RREC in the periphery of 30 kms around proposed 220 KV GSS PS_1/Bajju) with additional 2 Nos. of 132 KV feeder bays and 4 Nos. of 33 KV feeder bays at each new 132 KV GSS for Wind / Solar developers

4. **220 KV GSS at Ramdev Nagar (Near Phalodi) (Jodhpur Distt.)**

(i) 220/132 KV, 1x160 MVA GSS at Ramdev Nagar

(ii) 5 KM LILO of one circuit of U/C 220 KV D/C Dechu-Phalodi line at proposed 220 KV GSS Ramdev Nagar

(iii) 132/33, 1x20/25 MVA transformers at proposed 220 KV GSS Ramdev Nagar

(iv) Additional 2 Nos. of 220 KV feeder bays, 6 Nos. of 132 KV feeder bays and 6 Nos. of 33 KV feeder bays for Wind / Solar developers

(v) 2 nos. of 1x20/25 MVA,132/33 KV GSS alongwith 25 kM 132 kV 2xD/C lines (to be identified later on in consultation with field officers of RVPN/RREC in the periphery of 30 kms around proposed 220 KV GSS Ramdev Nagar) with additional 2 Nos. of 132 KV feeder bays and 4 Nos. of 33 KV feeder bays at each new 132 KV GSS for Wind / Solar developers

5. **220 KV GSS Chatrail (Jaisalmer Distt.)**

(i) 220/132 KV, 1x160 MVA GSS at Chatrail

(ii) 60 Km 220 KV D/C Chatrail-Ramgarh (U/C 400 KV GSS) line

(iii) 132/33 KV, 1x20/25 MVA GSS at Chatrail

(iv) Additional 2 Nos. of 220 KV feeder bays, 6 Nos. of 132 KV feeder bays and 6 Nos. of 33 KV feeder bays for Wind / Solar developers

(v) 2 nos. of 1x20/25 MVA,132/33 KV GSS alongwith 25 kM 132 kV 2xD/C lines (to be identified later on in consultation with field officers of RVPN/RREC in the periphery of 30 kms around proposed 220 KV GSS Chatrail) with additional 2 Nos. of 132 KV feeder bays and 4 Nos. of 33 KV feeder bays at each new 132 KV GSS for Wind / Solar developers

6. **220 KV GSS at Pokaran (New loc.) (Jaisalmer Distt.)**

(i) 220/132 KV, 1x160 MVA GSS at Pokaran

(ii) 5 Km LILO of both the ckts of U/C 220 KV D/C Ramgarh GTPP – Dechu line at Pokaran

(iii) 132/33, 1x20/25 MVA transformers at proposed 220 KV GSS Pokaran

(iv) 10 Km LILO of existing 132 KV S/C Chandan-Pokaran line at proposed 220 KV GSS Pokaran

(v) Additional 2 Nos. of 220 KV feeder bays, 6 Nos. of 132 KV feeder bays and 6 Nos. of 33 KV feeder bays for Wind / Solar developers

(vi) 2 nos. of 1x20/25 MVA,132/33 KV GSS alongwith 25 kM 132 kV 2xD/C lines (to be identified later on in consultation with field officers of RVPN/RREC in the periphery of 30 kms around proposed 220 KV GSS Pokaran) with additional 2 Nos. of 132 KV feeder bays and 4 Nos. of 33 KV feeder bays at each new 132 KV GSS for Wind / Solar developers

7. **220 KV GSS at Kolayat (New loc.) (Bikaner Distt.)**

(i) 220/132 KV, 1x160 MVA GSS at Kolayat

(ii) 15 Km 220 KV D/C Gajner (U/C 220 KV GSS)-Kolayat line

(iii) 132/33, 1x20/25 MVA transformers at proposed 220 KV GSS Kolayat

(iv) 10 Km LILO of existing 132 KV S/C Kolayat-Bajju line at proposed 220 KV GSS Kolayat

(v) Additional 2 Nos. of 220 KV feeder bays, 6 Nos. of 132 KV feeder bays and 6 Nos. of 33 KV feeder bays for Wind / Solar developers

(vii) 2 nos. of 1x20/25 MVA,132/33 KV GSS alongwith 25 kM 132 kV 2xD/C lines (to be identified later on in consultation with field officers of RVPN/RREC in the periphery of 30 kms around proposed 220 KV GSS Kolayat) with additional 2 Nos. of 132 KV feeder bays and 4 Nos. of 33 KV feeder bays at each new 132 KV GSS for Wind / Solar developers

8. 1 Km LILO of under construction 220 KV D/C Ramgarh GTPS-Dechu line at under construction 400 KV GSS Ramgarh

9. 2 nos. of 1x20/25 MVA,132/33 KV GSS alongwith 25 kM 132 kV 2xD/C lines (to be identified later on in consultation with field officers of RVPN/RREC in the periphery of 30 kms around approved 220 KV GSS Kanasar) with additional 2 Nos. of 132 KV feeder bays and 4 Nos of 33 KV feeder bays at each new 132 KV GSS for Wind / Solar developers

10. 2 nos. of 1x20/25 MVA,132/33 KV GSS alongwith 25 kM 132 kV 2xD/C lines (to be identified later on in consultation with field officers of RVPN/RREC in the periphery of 30 kms around approved 220 KV GSS Bap) with additional 2 Nos. of 132 KV feeder bays and 4 Nos. of 33 KV feeder bays at each new 132 KV GSS for Wind / Solar developers

11. 2 nos. of 1x20/25 MVA,132/33 KV GSS alongwith 25 kM 132 kV 2xD/C lines (to be identified later on in consultation with field officers of RVPN/RREC in the periphery of 30 kms around approved 400 KV GSS Bhadla) with additional 2 Nos. of 132 KV feeder bays and 4 Nos. of 33 KV feeder bays at each new 132 KV GSS for Wind / Solar developers

B. 33 kV System

1. 5 nos. or 3 Nos of 33/11 kV Sub-stations (to be identified later on in consultation with field officers of RVPN and Jodhpur Discom) in the periphery of 10 kms around approved/proposed RVPN's 220 kV GSS and 132 kV GSS respectively located in Jaisalmer, Jodhpur and Bikaner and connected through 33 kV S/C line on Panther/Dog conductor.

SNo.	Existing/Approved/Proposed GSS of RVPN	Number of 33/11 kV S/S, MVA/ckt kms
A	**Existing GSS**	
1	132 kV PS_No.1 GSS	3 Nos./ 15 MVA/ 30 kms
2	132 kV PS_No.5 GSS	3 Nos./ 15 MVA/ 30 kms
B	**Approved GSS**	
1	220 kV Bap GSS	5 Nos./ 25 MVA/ 50 kms
2	220 kV Kanasar GSS	5 Nos./ 25 MVA/ 50 kms
3	132 kV PS_No.2 GSS	3 Nos./ 15 MVA/ 30 kms
4	132 kV PS_No.3 GSS	3 Nos./ 15 MVA/ 30 kms
5	132 kV PS_No.4 GSS	3 Nos./ 15 MVA/ 30 kms
C	**Proposed GSS**	
1	7 Nos. of 220 kV GSS	35 Nos./175 MVA/ 350 kms
2	20 Nos. of 132 kV GSS	60 Nos./300 MVA/600 kms
	Total 33/11 kV S/S	**120 Nos./ 600 MVA/ 1200 kms**

Appendix-IVB

Supplementary Transmission System for Evacuation of power from proposed Wind Power Projects in Jaisalmer district

A. 400 kV System

1. 400 kV GSS Jaisalmer-2 (location to be decided at a distance 30-50 kms from 400 kV Akal GSS) alongwith following transmission system
   - (i) 2x500 MVA, 400/220 kV GSS at Jaisalmer-2
   - (ii) 130 kM 400 kV D/C Jaisalmer-2 -Barmer line
   - (iii) 50 kM 400 kV S/C Akal(1)- Jaisalmer-2 line
   - (iv) 1x125 MVAR, 400 kV bus type reactor at proposed 400 kV GSS Jaisalmer-2
   - (v) 9 Nos. of 220 kV feeder bays at proposed 400 kV GSS Jaisalmer-2.

GENERATION SCHEDULE FOR THE CONDITION CORRESPONDING TO 2013-14

LOAD FLOW ANALYSIS CONVERGED, ITERATIONS = 5 0 = 5

CASE NO. : 1 CONTINGENCY : 0 SCHEDULE NO. :

CONTINGENCY NAME : Transcase RATING CONSIDERED : NOMINAL

Number	Name	Code	Area	Owner	Voltage-pu	Angle(deg)	Pgen(MW)	Qgen(MVAR)	Qmin(MVAR)	Qmax(MVAR)
52	STPS2200	5	4	1	1.0152	17.3230	450.000	189.869	-110.000	250.000
53	STPS400G	5	4	1	1.0500	19.5976	900.000	38.208	-240.000	500.000
60	KTPSB1	5	4	1	1.0184	24.8138	190.000	13.441	-50.000	100.000
61	KTPSB2	5	4	1	1.0100	25.2663	378.000	25.174	-90.000	190.000
62	KTPSB3	5	4	1	1.0100	25.2663	189.000	12.587	-45.000	95.000
70	ANTAN1	4	4	1	1.0184	23.7495	240.000	4.550	-60.000	120.000
71	ANTAN2	4	4	1	1.0300	22.6572	140.000	2.176	-35.000	70.000
80	RAPPB1	4	4	1	1.0100	26.2162	100.000	3.439	-45.000	90.000
81	RAPPB2	4	4	1	1.0100	27.0329	400.000	7.210	-100.000	200.000
92	KAHEB1	5	4	1	0.9700	16.7636	0.000	0.000	-12.000	24.000
93	KAHEB2	5	4	1	0.9998	16.6743	0.000	0.000	-22.000	44.000
95	BHEIG	5	4	1	1.0100	39.9151	105.000	35.859	-24.000	45.000
97	BPRO	5	4	1	1.0300	23.9110	168.000	-85.314	-40.000	80.000
98	JSC	5	4	1	1.0100	23.6812	96.000	-8.394	-24.000	48.000
44	MREB_BYD	4	3	3	1.0200	5.4317	195.000	-63.263	-60.000	125.000
46	MREB_TH	4	3	3	1.0300	0.0000	-1050.936	373.632	-150.000	300.000
63	KTPS84	5	4	3	1.0300	24.8353	350.000	23.434	-80.000	170.000
39	GLTPS_G	5	4	1	1.0300	31.7708	226.000	44.182	-20.000	40.000
37	DGTPS_G	5	4	1	1.0100	12.0644	325.000	3.868	-30.000	45.000
35	DLTPS_G	3	4	1	1.0000	90.0195	924.000	-23.193	-96.000	110.000
82	RAPPC_G	5	4	1	1.0100	25.1763	400.000	17.321	-100.000	200.000
85	CHABRA_G	5	4	1	1.0100	26.3411	300.000	42.433	-220.000	454.254
49	RJWBSZ01	5	4	1	1.0300	31.6581	242.000	52.734	-60.000	120.000
45	RJWBSTG1	5	4	1	1.0000	30.7077	326.000	3.860	-180.000	360.000
74	VSLP_G	6	4	1	1.0100	21.6708	121.000	5.110	-30.000	60.000
87	KALTNS_G	6	4	1	1.0200	20.0690	1040.000	182.939	-265.000	490.000
86	CHABR_G2	5	4	1	1.0200	23.6575	660.000	87.016	-115.000	330.000
88	STPS_G1	5	4	1	1.0200	20.3354	660.000	6.678	-115.000	330.000
89	RAMSWA_G	2	4	1	1.0000	26.5595	660.000	37.259	-115.000	330.000
79	RAPP_DG	4	4	1	0.0000	0.0000	0.000	0.000	-300.000	630.000
90	KBWAI_G	5	4	1	1.0200	26.7314	840.000	86.559	-315.000	535.630
99	BHOLP_G2	5	4	1	1.0000	15.3361	330.000	-78.674	0.000	334.795
76	JBNG_G33	3	4	1	0.9740	19.3104	350.000	-36.363	-31.000	62.000
1378	KAWASB21	3	3	1	1.0000	17.2121	94.000	13.859	0.000	0.000
1318	PS_5	3	1	1	1.0000	24.6352	30.000	24.353	0.000	0.000
1383	PSWat	3	3	1	1.0000	17.8557	26.000	-14.932	0.000	0.000
1377	PS_1	3	3	1	1.0000	17.5023	26.000	-11.610	0.000	0.000
1376	PS_3	3	1	1	1.0000	27.2446	26.000	-31.749	0.000	0.000
1157	RAP_1	3	3	1	1.0000	24.3051	94.000	4.528	0.000	0.000
1409	PSWo4_1	3	3	1	1.0000	26.4161	26.000	-31.107	0.000	0.000
2383	HAVCH_21	10	3	1	0.0000	0.0000	0.000	0.000	0.000	0.000
2387	AAU_21	10	3	1	1.0000	24.0310	98.000	18.255	0.000	0.000
2385	BADISI01	10	3	1	1.0000	26.4944	94.000	-8.954	0.000	0.000
2386	HOTHABI1	10	3	1	0.0000	0.0000	0.000	0.000	0.000	0.000
2389	RAMDEV01	3	3	1	1.0000	18.1657	94.000	-15.512	0.000	0.000
2388	KALAR_21	10	3	1	0.0000	0.0000	0.000	0.000	0.000	0.000
2384	BOLAYT21	10	3	1	1.0000	13.7874	94.000	-15.475	0.000	0.000
2382	PS_1/B21	10	3	1	1.0000	17.9467	94.000	-1.052	0.000	0.000
1382	BAGJU	3	3	1	1.0000	29.1814	26.000	-3.798	0.000	0.000
2367	BHADLA41	10	3	1	1.0000	26.9405	187.392	-4.374	0.000	0.000
354	RAMGAR42	3	3	1	1.0000	32.4602	300.000	136.121	0.000	0.000
353	AKAL_3	3	3	1	1.0000	30.1429	326.400	49.364	0.000	0.000
36	ANSOR_33	6	4	1	1.0000	41.9401	90.000	3.170	0.000	0.000

355	MOKAL_3	3	2	1	1.0000	56.8474	300.000	-61.000	0.000	0.000
96	TEMUKIA	6	1	1	1.0300	37.4927	112.500	-34.602	0.000	0.000
94	MAUNA2	6	2	1	1.0010	31.0970	165.000	-25.578	0.000	0.000
357	AMEGR2	3	2	1	1.0000	32.9643	207.000	-61.017	0.000	0.000
345	JA190322	10	2	1	1.0000	28.3677	225.000	10.694	0.000	0.000
333	TIHWO	9	2	1	1.0000	20.0896	105.000	-66.996	0.000	0.000
237	MANA_2MT	1	5	1	1.0000	19.6800	300.000	-72.178	0.000	0.000
336	KUSH_2MP	9	5	1	1.0000	21.1543	100.000	-33.070	0.000	0.000
2458	KEMB_9P	8	1	1	1.0000	17.2433	50.000	26.991	0.000	0.000
1363	POKEMRO	3	1	1	1.0000	32.9644	160.000	-1.266	0.000	0.000
9361	CKAMRAL1	12	1	1	1.0000	18.9715	150.000	5.902	0.000	0.000
2364	MAREMAR1	15	1	1	0.0000	0.0000	0.000	0.000	0.000	0.000
2390	TRAHEN1	2	1	1	0.0000	0.0000	0.000	0.000	0.000	0.000
9364	RAMONA1	15	2	2	1.0000	15.5533	150.000	-1.974	0.000	0.000

Number of generators 67

Summary of results

TOTAL REAL POWER GENERATION : 14833.000 MW
TOTAL REAL POWER INJECT.-Vm 1. : 0.000 MW
TOTAL REACT. POWER GENERATION : 411.953 MVAR
GENERATION pf : 1.000

TOTAL SHUNT REACTOR INJECTION : 0.000 MW
TOTAL SHUNT REACTOR INJECTION : -7232.874 MVAR

TOTAL SHUNT CAPACIT.INJECTION : 0.000 MW
TOTAL SHUNT CAPACIT.INJECTION : 3294.466 MVAR

TOTAL SHUNT FACTS.INJECTION : 0.000 MVAR
TOTAL SHUNT FACTS.DRAWAL : 0.000 MVAR

TOTAL REAL POWER LOAD : 13047.562 MW
TOTAL REAL POWER DRAWAL -Vm 1 : 1250.936 MW
TOTAL REACTIVE POWER LOAD : 5439.782 MVAR
LOAD pf : 0.923
TOTAL COMPENSATION AT LOADS : 0.000 MVAR
TOTAL HVDC REACTIVE POWER : 0.000 MVAR

TOTAL REAL POWER LOSS (AC+DC) : 504.314848 MW (504.314848+ 0.000000)
PERCENTAGE REAL LOSS (AC+DC) : 3.404
TOTAL REACTIVE POWER LOSS : -4594.282853 MVAR

Appendix-VB

GENERATION SCHEDULE FOR WF AND SOLAR POWER PROJECTS

S. No.	Name of Sub-station	Condition 2013-14			
		Connected Wind Farms Capacity		Connected Solar Power Projects Capacity	
		Installed Capacity	Gen. in LFS (75% IC)	Installed Capacity	Gen. in LFS (75% IC)
A	Jaisalmer & Barmer Districts				
	400 kV GSS				
	Akal (1)	435	326	-	-
	Jaisalmer-2	300	225	-	-
	Ramgarh	800	600	200	150
	220 kV GSS				
	Amarsagar	545	409	-	-
	Miada (Sutlon)	220	165	-	-
	Chotrail (P)	-	-	200	150
	Total (A)	2300	1725	400	300
B	Jodhpur & Bikaner Districts				
	400 kV GSS				
	Bhadla	100	75	150	113
	220 kV GSS				
	Bap	-	-	125	94
	Kanasar	-	-	125	94
	Pokaran(P)	100	75	100	75
	Badisid (P)	-	-	125	94
	Ramdev Nagar (P)	-	-	125	94
	Aau (P)	-	-	125	94
	PS(1)/Bajju (P)	-	-	125	94
	Kolayat (P)	-	-	125	94
	132 kV GSS				
	Bajju	-	-	35	26
	PS(1)	-	-	35	26
	PS(2)	-	-	35	26
	PS(3)	-	-	35	26
	PS(4)	-	-	35	26
	PS(5)	-	-	40	30
	Total (B)	200	150	1340	1005
	Total (A+B)	2500	1875	1740	1305
	Total (Solar + Wind)	4240	3180		

Appendix-VI

Power flow on important lines & transformers

S. No	Particilars	Power flow
A	400 kV Sub-Stations	
1	400 kV GSS Jaisalmer-I (Akal) (2x315 MVA + 1x500 MVA)	- 599 MW
2	400 kV GSS Ramgarh (3x500 MVA)	- 993 MW
3	400 kV GSS Bhadala (3x315 MVA)	- 429 MW
4	400 kV GSS Barmer (2x315 MVA)	- 46 MW
5	400 kV GSS Jodhpur (Mandore) (3x315 MVA)	290 MW
6	400 kV GSS Jodhpur (New) (2x315 MVA)	237 MW
7	400 kV GSS Bikaner (2x315 MVA)	158 MW
8	400 kV GSS Merta (2x315 MVA)	186 MW
9	400 kV GSS Jaisalmer-II (2x500 MVA in 2013-14 & one additional 1x500 MVA transformer in 2014-15 condition) (Proposed)	- 225 MW
B	400 kV lines	
1	400 kV Ramgarh-Akal line (D/C)	286 MW
2	400 kV Ramgarh-Bhadala line (D/C)	707 MW
3	400 kV Bhadala-Bikaner line (D/C) (Quad Moose)	910 MW
4	400 kV Bhadala-Merta line (S/C)	212 MW
5	400 kV Bhadala-Jodhpur line (S/C)	5 MW
6	400 kV Akal-Jodhpur(Mandore) line (S/C)	224 MW
7	400 kV Akal-Jodhpur(New) line (D/C) (Quad Moose)	535 MW
8	400 kV Akal-Barmer line (S/C)	117 MW
9	400 kV Rajwest-Barmer line (S/C)	366 MW
10	400 kV Rajwest-Jodhpur(Mandore) line (ONE CKT)	199 MW
11	400 kV Rajwest-Jodhpur(New) line (ONE CKT)	161 MW
12	400 kV Barmer-Bhinmal line (D/C)	760 MW
13	400 kV Jodhpur(New)-Merta line (S/C)	329 MW
14	400 kV Jodhpur(Mandore)- Kankroli line (S/C)	146 MW
15	400 kV Jodhpur(New)- Jodhpur(Mandore) lines (2xS/C)	11 MW
16	400 kV Jodhpur(New)-Udaipur line (D/C)	114 MW
17	400 kV Bikaner-STPS line (S/C)	- 32 MW
18	400 kV Bikaner-STPS line (D/C)	- 104 MW
19	400 kV Bikaner-Deedwana line (S/C)	246 MW
20	400 kV Bikaner-Merta line (S/C)	- 24 MW
21	400 kV Bikaner-Sikar line (D/C)	682 MW
22	400 kV Merta -Ramgarh line (S/C)	262 MW
23	400 kV Merta -Jaipur (North) line (S/C)	340 MW

Page 1 of 4

S. No	Particilars	Power flow
24	400 kV Jaisalmer (II) - Barmer line (D/C) (proposed)	232 MW
25	400 kV Jaisalmer (II) - Akal Line (S/C) (proposed)	- 8 MW
C	220 kV & 132 lines/transformers	
C-1	400 kV GSS Akal	
1	220 kV S/C Akal-Giral LTPS line	64 MW
2	220 kV S/C Akal-Barmer line	66 MW
3	220 kV S/C Akal-Amarsagar line	- 128 MW
4	220 kV S/C Akal-Mada (Suzlon's pooling station) line	- 276 MW
5	220 kV lines from 400 kV GSS Akal to developer's 220 kV pooling stations	- 326 MW
C-2	400 kV GSS Ramgarh (Approved)	
1	220 kV D/C Ramgarh (400 kV GSS)-Ramgarh GTPS line	- 217 MW
2	220 kV D/C Ramgarh (400 kV GSS)-Pokrana (new identified 220 kV GSS) line	109 MW
3	220 kV D/C Ramgarh (400 kV GSS)-Chatrail (new identified 220 kV GSS) line	- 148 MW
4	220 kV D/C Ramgarh (400 kV GSS)-Mokla (Suzlon's WF pooling station) line	- 296 MW
5	220 kV lines from 400 kV GSS Ramgarh to developer's 220 kV WF's pooling stations	- 300 MW
6	3x160 MVA, 220/132 kV transformers at 400 kV GSS Ramgarh	- 150 MW
7	220 kV D/C Ramgarh (400 kV GSS)-Parewar (new identified 220 kV GSS) line	-
8	220 kV D/C Ramgarh (400 kV GSS)-Sarayla Vi Bhati (new identified 220 kV GSS) line	-
C-3	220 kV GSS Amarsagar	
1	220 kV S/C Amarsagar-Ramgarh GTPS line	- 1 MW
2	220 kV D/C Amarsagar-Mokla (Suzlon's WF pooling station) line	- 207 MW
3	220 kV S/C Amarsagar-Mada (Suzlon's pooling station) line	113 MW
4	3x100 MVA, 220/132 kV transformers at 220 kV GSS Amarsagar	- 130 MW
5	132 kV D/C Amarsagar-Teindaria (Electcon's pooling station) line	- 141 MW
6	132 kV D/C Amarsagar-Jaisalmer line	70 MW
7	132 kV D/C Jaisalmer-Sheo line	53 MW
8	132 kV D/C Jaisalmer-Chandan line	27 MW
9	4x20/25 MVA, 132/33 kV transformers at 220 kV GSS Amarsagar	- 90 MW
C-4	400 kV GSS Bhadla (Approved)	
1	220 kV D/C Bhadla-Bap line	12 MW
2	220 kV D/C Bhadla-Kanasar line	- 151 MW
3	220 kV D/C Bhadla-PS1/Baiju (new identified 220 kV GSS) line	- 104 MW
4	220 kV D/C Bhadla-Badisid (new identified 220 kV GSS) line	
5	3x160 MVA, 220/132 kV transformers at 400 kV GSS Bhadla	- 188 MW
C-5	220 kV GSS Bap (Approved)	
1	Solar Power Projects generation (75% of IC)	94 MW
2	Wind Farm Power Projects generation (75% of IC)	0 MW
3	2x160 MVA, 220/132 kV transformers at 220V GSS Bap	- 46 MW

S. NO	Particilars	Power flow
4	220 kV D/C Bap-Bhadla (400 kV GSS) line	12 MW
5	220 kV S/C Bap-Phalodi line	92 MW
6	220 kV S/C Bap-Bassingsar LTPS line	132 MW
7	220 kV D/C Bap-Badisid (new identified 220 kV GSS) line	38 MW
8	220 kV D/C Bap-Badi Dhani (new identified 220 kV GSS) line	-
9	132 kV S/C Bap-Phalodi line	22 MW
C-6	**220 kV GSS Kanasar (Approved)**	
1	Solar Power Projects generation (75% of IC)	94 MW
2	Wind Farm Power Projects generation (75% of IC)	0 MW
3	2x160 MVA, 220/132 kV transformers at 220V GSS Kanasar	- 151 MW
4	220 kV D/C Kanasar-Bhadla (400 kV GSS) line	151 MW
5	132 kV S/C Kanasar - PS3 line	- 3 MW
6	132 kV S/C Kanasar - PS1 line	- 29 MW
7	132 kV 2xS/C Kanasar - PS2 lines	- 26 MW
C-7	**220 kV GSS Badisid (New identified 220/132/33 kV GSS)**	
1	Solar Power Projects generation (75% of IC)	94 MW
2	Wind Farm Power Projects generation (75% of IC)	0 MW
3	1x160 MVA, 220/132 kV transformer at 220V GSS Badisid	- 94 MW
4	220 kV D/C Badisid-Bap line	- 38 MW
5	220 kV D/C Badisid-Aau line	132 MW
6	220 kV D/C Badisid-Bhadla (400 kV GSS) line	-
C-8	**220 kV GSS PS1/Bajju (New identified 220/132/33 kV GSS)**	
1	Solar Power Projects generation (75% of IC)	94 MW
2	Wind Farm Power Projects generation (75% of IC)	0 MW
3	1x160 MVA, 220/132 kV transformer at 220V GSS PS1/Bajju	- 104 MW
4	220 kV D/C PS1/Bajju -Bhadla (400 kV GSS) line	104 MW
5	132 kV S/C PS1/Bajju(new identified 220 kV GSS) -PS1(132 kV GSS) line	6 MW
6	132 kV S/C PS1/Bajju(new identified 220 kV GSS) -Bajju(132 kV GSS) line	- 17 MW
C-9	**220 kV GSS Kolayat (new loc) (New identified 220/132/33 kV GSS)**	
1	Solar Power Projects generation (75% of IC)	94 MW
2	Wind Farm Power Projects generation (75% of IC)	0 MW
3	1x160 MVA, 220/132 kV transformer at 220V GSS Kolayat	- 31 MW
4	220 kV D/C Kolayat -Gajner (D/C 220 kV GSS) line	31 MW
5	132 kV S/C Kolayat(new identified 220 kV GSS)-Kolayat(132 kV GSS) line	63 MW
6	132 kV S/C Kolayat (new identified 220 kV GSS) -Bajju(132 kV GSS) line	OPEN
C-10	**220 kV GSS Aau (new loc) (New identified 220/132/33 kV GSS)**	
1	Solar Power Projects generation (75% of IC)	94 MW

S. No	Particilars	Power flow
2	Wind Farm Power Projects generation (75% of IC)	0 MW
3	1x160 MVA, 220/132 kV transformer at 220V GSS Aau	- 65 MW
4	220 kV D/C Aau -Dedusid (new identified 220 kV GSS) line	- 131 MW
5	220 kV D/C Aau -Baitwasia (U/C 220 kV GSS) line	155 MW
6	132 kV S/C Aau(new identified 220 kV GSS)-Aau(132 kV GSS) line	65 MW
7	132 kV S/C Aau(new identified 220 kV GSS)-Phalodi line	10 MW
C-11	**220 kV GSS Ramdev Nagar (New Identified 220/132/33 kV GSS)**	
1	Solar Power Projects generation (75% of IC)	94 MW
2	Wind Farm Power Projects generation (75% of IC)	0 MW
3	1x160 MVA, 220/132 kV transformer at 220V GSS Ramdev Nagar	- 94 MW
4	220 kV D/C Ramdev Nagar -Phalodi line	94 MW
5	220 kV D/C Ramdev Nagar -Dechu line	0 MW
6	220 kV D/C Ramdevnagar - Malar (new identified 220 kV GSS) line	-
C-12	**220 kV GSS Pokaran (new loc) (New identified 220/132/33 kV GSS)**	
1	Solar Power Projects generation (75% of IC)	75 MW
2	Wind Farm Power Projects generation (75% of IC)	75 MW
3	1x160 MVA, 220/132 kV transformer at 220V GSS Pokaran	- 124 MW
4	220 kV D/C Pokaran -Dechu (U/C 220 kV GSS) line	241 MW
5	220 kV D/C Pokaran -Ramgarh (U/C 400 kV GSS) line	- 107 MW
6	132 kV S/C Pokaran(new identified 220 kV GSS)-Pokaran(132 kV GSS) line	15 MW
7	132 kV S/C Pokaran(new identified 220 kV GSS) -Chandan(132 kV GSS) line	0 MW
C-13	**220 kV GSS Chatrail (Jaisalmer) (New identified 220/132/33 kV GSS)**	
1	Solar Power Projects generation (75% of IC)	150 MW
2	Wind Farm Power Projects generation (75% of IC)	0 MW
3	1x160 MVA, 220/132 kV transformer at 220V GSS Chatrail	- 150 MW
4	220 kV D/C Chatrail -Ramgarh (U/C 400 kV GSS) line	150 MW
C-14	**Other 220 kV Lines**	
1	220 kV S/C Phalodi-Tinwari line	86 MW
2	220 kV S/C Dechu- Phalodi line	24 MW
3	220 kV S/C Dechu-Tinwari line	109 MW
4	220 kV D/C Baitwasia-Karwar line	169 MW
5	220 kV 2xS/C Tinwari-Jodhpur (400 kV GSS Mandore) lines	183 MW

Himachal Pradesh

H.P. POWER TRANSMISSION CORPORATION LIMITED

HPPTCL

SCHEME FOR PROVIDING TRANSMISSION

INFRASTRUCTURE WORKS FOR EVACUATION OF

POWER OF SMALL HYDRO ELECTRIC PROJECTS IN

HIMACHAL PRADESH

VOLUME-I

ESTIMATED COST- ₹ 456 CRORE

BAROWALIAS HOUSE,
KHALINI, SHIMLA-171002.
TELEFAX: 0177-2626284

Summary sheet of transmission project wise investment and capacity to be evacuated is tabulated as under:-

Sr .N	Name of transmission project	Distt/ Basin	Estimated cost (₹ in Crore)	Capacity of small HEPs to be evacuated (MW)	Tent COD	References
1	66/220 kV 1x80/100 MVA sub station at Sunda kV+ 66 kV D/C Line from Andhra PH to 66/132/220 kV sub station Sunda	Shimla/ Yamuna	54	64	2013-14	Table-I, Plate-A B Annex-I
2	132 kV D/C Line from Tangnu Romai HEP to 66/132/220 kV sub station at Sunda	Shimla/ Yamuna	13	46	2015-16	Table-I Plate-C Annex-II
3	132 kV D/C line from Rupin HEP to 66/132/220 kV sub station at Sunda	Shimla/ Yamuna	21	56	2015-16	Table-I Plate-D Annex-III
4	22/66 kV GIS sub station at Nirmand (Bagipul)+66 kV D/C line up to Kotla+ Augmentation of 22/66 kV and 66/220 kV Transformers at Kotla	Kullu/ Satluj	133	70	2013-14	Table-I Plate-E Annex-IV
5	33/132 kV, 2x31.5 MVA sub station at Chamgi with LILO of 132 kV Dehra- Kangra S/C Line	Kangra/ Beas	65	42	2013-14	Table-I Plate-F Annex-V
6	33/220 kV, 50/63 MVA sub station at Fozal with LILO of 220 kV Pong- Nalagarh Line	Kullu/ Beas	80	96	2013-14	Table-I Plate-G Annex-VI
7	132/220 kV, 2x80/100 MVA GIS sub Station at Chhaur with 132 kV Sorsali P.S to Chhaur D/C Line	Kullu/ Beas	90	52	2014-15	Table-IV Plate-H Annexure-VII
	Total		456	428		

SCHEME FOR EVACUATION OF POWER FROM SMALL HEPs IN H.P.

H.P Power Transmission Corporation Limited
(A State Govt. Undertaking)
Barowalias House, Khalini, Shimla-171002.
Phone 0177-2623415 (Telefax: 0177-2626284).

No HPPTCL/Planning/2011-12- 6838 Dated:- 7/1/2012.

To

The Secretary,
H.P. State Electricity Regulatory Commission,
Keonthal Commercial Complex
Khalini, Shimla-171002.

Subject: **Submission of information on likely addition of RE based power plants in 12th Plan for identification of Transmission Infrastructure**

Sir,

Enclosed find information on prescribed formats as desired in the meeting held on 29.12.2011 under the Chairmanship of Hon'ble Chairman, HPERC for kind information and necessary action please

Dy Secy

Yours faithfully,

General Manager (C&D)

D.A: As above.

Copy to the following for information and necessary action please.

1. The Executive Director(STF-Smart Grid), Power Grid Corporation of India Limited, "Saudamini" Plot No 2, Sector-29, Gurgaon-122 001with reference to his office letter No.C/SG/06/RES dated 8.12.2011 alongwith copy of formats
2. The Chief Engineer (SP), HPSEBL, Vidyut Bhawan, Shimla-4.
3. The Chief Engineer (Energy), Directorate of Energy, Phase-III, Sector -6, New Shimla.
4. The Chief Executive officer, HIMURJA, Shimla-9.

General Manager (C&D)

Data for Renewable Energy Resources and its Transmission Infrastructre

Name of the State Himachal Pradesh

(A) **Existing RES**

(i)

Total Installed Capacity (MW)	
Wind	Nil
Solar PV	Nil
Solar Thermal	Nil
Small Hydro	442.75
Biomass/Waste to Energy	Nil

(ii) **Availability**

	Injection (MW)		Injection in Grid Peak/off peak hrs (MW)	
	Maximum	Minimum	Peak	Off Peak
Wind	Nil	Nil	Nil	Nil
Solar PV	Nil	Nil	Nil	Nil
Solar Thermal	Nil	Nil	Nil	Nil
Small Hydro	[illegible]	.199	[illegible]	.199
Biomass/Waste to Energy	Nil	Nil	Nil	Nil

Data for Renewable Energy Resources and its Transmission Infrastructure

Name of the State: Himachal Pradesh

(A) Existing RES

(a) Network Connectivity

Type: SHP

a) Area: Grid Basis

S. No.	Developer	Project Name	Installed Capacity (MW)	Location (Dist)	Transmission Scheme (details like name of line (D/c or S/c), voltage level(KV), length, Conductor type etc.		Maximum Injection (MW)	Name of 220kV STU/HPSEB S/s for above injection	Nr. System beyond injection point
					Immediate Evacuation	Associated Strengthening, if any			
1	2	3	4	5	6	7	8	9	10
1	Anika Projects India Ltd	Odar	5.00	Chamba	33/11 kV S/Stn. Sihunta			220/132/33kV S/Stn Jassur	220kV Barn - S/s - Kang Interconn. Line
2	Sum Techno Construction Co. (P) Ltd	Dehar-II	3.96	Chamba					
3	Vasishi Industrial Power Ltd	Dehar	5.00	Kangra	33/11kV S/Stn. Kotla				
4	Baheli Hydro Power Pvt. Ltd	Gaj II	1.50	Kangra	33/11kV S/Stn. Gaj				
5	Vasishi Industrial Power Ltd	Upper Khauli	5.00	Kangra					
6	HPSEBL	Gaj	10.50	Kangra					
7	Dharamshala Hydro Power Ltd	Manjir	4.50	Kangra	33/11kV S/Stn. Sulhpur				
8	Dharamshala Hydro Power Ltd	Manjir-II	5.00	Kangra					
9	Devdadhar Hydro System Pvt. Ltd.	Salej	0.15	Kangra					
10	Sighi Brothers Hydro Power (P) Ltd	Bathal	4.66	Kangra	33/11kV S/Stn. Shahpur				
11	HPSEBL	Khauli	12.00	Kangra	33kV S/Stn Khauli				
	Sub Total		54.15				64.98		
12	Vasishi Hydro Energies (P) Ltd	Baner-III	5.00	Kangra	33/11kV S/Stn. Haliter			220/132kV S/Stn Banikar	220kV Lanco Kan - Jullandhar Line
13	Vasishi Hydro Energies (P) Ltd	Manjir	5.00	Kangra					
14	HPSEBL	Binwa	12.00	Kangra					
15	Chatiyar Vidyut Kranti Pvt. Ltd	Lower Baroti Kothi	7.00	Kangra	33/11kV S/S Baijnath				
16	HPSEBL	Binwa	6.00	Kangra	33kV S/Stn Binwa				
17	HPSEBL	Bassi Aug	6.00	Mandi	33/11kV S/Stn. Bassi				
18	Avaldas Hydel Power Limited	Bina-I Dam	5.00	Kangra	132/33 kV S/Stn. Dehar			220/132kV S/Stn Hamirpur (Later will be connected to proposed 132/220kV S/Stn Hamirpur)	220kV Hamirpur - Jullandhar D/c line (Later connected to proposed 220/400kV PGCIL S/Stn Hamirpur)
19	Hgu Power Co. Pvt. Ltd	Jhu	4.50	Kangra					
20	Sri Sai Krishna Hydro Energies (P) Ltd	Lana-II	3.00	Kangra					
21	Sri Sai Krishna Hydro Energies (P) Ltd	Lana-III	3.00	Kangra					

1	2	3	4	5	6	7	8	9	10
22	Astha Projects India Ltd	Upper Awa	5.00	Kangra					
23	Awa Power Co. Pvt. Ltd	Awa	2.50	Kangra					
24	Neugal Power Co. Pvt. Ltd	Neugal-II	4.50	Kangra					
25	Om Hydropower Ltd.	Neugal	15.00	Kangra					
	Sub Total		86.50				100.2		
26	Aveo Maruti Hydro Power Pvt. Ltd.	Alwi	2.60	Kullu	33/11 kV S/Stn. Prini			132/33kV S/Stn Baggasu - 220/132/33kV S/Stn Kangra - 220/132kV S/Stn. Kunihar	
27	K.K.K. Hydro Power Ltd.	Baragran	4.93	Kullu	33/11 kV S/Stn. Nagger				
28	Fourseasons Marketing Pvt. Ltd	Sharan	2.60	Kullu					
29	Harisons Hydel Construction Co Pvt. Ltd	Brahmi Ganga	5.00	Kullu	33/11 kV S/Stn. Jari				
30	Sarabai Enterprises (P) Ltd.	Garahan	1.50	Mandi	33 kV S/Stn. THALOUT				
31	Kapil Mohan & Associates Hydro Power (P) Ltd	Jirah	4.00	Kullu	33/11 kV S/Stn. Barsaini				
32	Sai Engineering Foundation, New Shimla-9	Toss	10.00	Kullu					
33	Puri Oil Mills Ltd	Chakshi	2.00	Kullu					
34	Chevron Hydel Pvt. Ltd	Jiwa Kothan	4.00	Kullu	11 kV S/Stn. Shandha				
35	Sai Engineering Foundation	Marla	5.00	Kullu	33/11 kV S/Stn. Pekhan				
36	M/S A Power Himalaya Ltd Paonta Sahib	Solang	8.50	Kullu					
37	Project Management Cell UNDP GEF Small Power Division	Kullu	8.20	Kullu					
38	DSL Hydrowatt Ltd	Sarkari	2.50	Kullu	33/11 kV S/Stn. Kullu				
39	DSL Hydrowatt Ltd	Sarkari-II	5.40	Kullu					
40	Uttaka Hydro Powers (P) Ltd	Sattal Sarkari	5.00	Kullu					
41	Prakash Hydro Electric Power Ltd	Panjari	10.50	Mandi	33kV S/Stn. Panjoh				
42	Siri Ram & sons construction Pvt Ltd., New Delhi	Kullu	1.60	Kullu	33 kV S/Stn. Sainj				
43	Avedh Behari	Karbel	2.40	Kullu					
44	Himuja	Billing	2.40	Kullu	11kV Feeder Kurga				
	Sub Total		76.20				91.44		
45	Kapil Mohan & Associates Hydro Power Pvt. Ltd	Bun-Kund	9.00	Kullu	Proposed 33 kV Switching station, Pekhan			220/33kV S/Stn. at AHP Hydro	220/33kV S/Stn of Proj. 2 in Sainj
	Basin Total		222.85				267.42		

1	2	3	4	5	6	7	8	9	10
B)	Ayar-Ravi Basin								
1	Chirchind Hydro Power Ltd	Chirchind	5.00	Chamba	33/11 kV S/Stn. Chirchind			220/132/33kV S/Stn Jassore	220kV Barwala - Deog Interc. to Lung
2	B.K Sumi Engineers Power Projects Pvt. Ltd	Sumi	1.50	Chamba					
3	Virender Dogra Power Projects Pvt Ltd.	Marilari	1.00	Chamba	33/11 kV S/Stn. Koti				
4	Hara Kalash Hydro Power (P) Ltd	Salu	5.00	Chamba	33 kV Sub-Station Chamba				
5	Gimi Global Ltd	Tarola	5.00	Chamba	33/11 kV S/Stn. Nehra				
6	Cleanet Constructions Pt Ltd	Tarola-II	5.00	Chamba	132/33 kV S/Stn Kurthala				
7	Tarola Power Ltd.	Tarola-III	5.00	Chamba					
8	A.T. Hydro (P) Ltd.	Upper Tarola	5.00	Chamba					
9	Tajin Sumila hydro Energies Pvt. Ltd.	Upper Sumila	12.00	Chamba					
10	Gimi Global Ltd	Bisso	4.95	Chamba					
11	HPSEBL	Holi	3.00	Chamba	33 kV Sub-Station Holi				
12	HPSEBL	Sai-II	2.00	Chamba	33 kV Sub-Station Maredi				
13	HPSEBL	Killar	0.30	Chamba	33 kV Sub-Station Killar				
14	HPSEBL	Bhari Singh Mohaned	0.45	Chamba	11kV Chamba				
	Sub Total		55.20				66.24		
15	Belg Hydro Power Ltd	Belg	5.00	Chamba	Proposed 220/33 kV S/Stn Kurwar			Proposed 220/33 kV S/Stn Kurwar	220kV D/C Chamera III P
16	Inta Shakti Ltd	Dunali	3.00	Chamba					
17	Baloi Hydro Power Ltd	Baloi Ka Nullah	2.50	Chamba					
	Sub Total		10.50				30.2		
	Basin Total		65.70				97.44		

1	2	3	4	5	6	7	8	9	10
c)	**Area - Sutlej Basin**								
1	Dive Sanchar Hydro Power (Pt Ltd	Rukti-II	5.00	Kinnaur	220 kV S/Stn Rukti			220/66/220kV S/Stn Kashi - 220/132kV S/Stn Kunihar	
2	HPSEBL	Rukti-I	1.50	Kinnaur					
3	Sai Engineering Foundation	Sirang	3.00	Kinnaur	66/22 kV S/Stn Bhakkro				
4	Tangling Mini Hydel Power Project	Tangling	5.00	Kinnaur					
5	Shree Bhimani Power Projects (P) Ltd	Mangling	4.50	Shimla	220/66/22 kV S/Stn. Kotla				
6	HPSEBL	Chaura-I	22.50	Shimla					
7	Regent Energy Ltd	Rakchad	5.00	Kinnaur	66/22 kV S/Stn. Nathpa				
8	Ascent Hydro Projects Ltd.	Panwi	4.00	Kinnaur					
9	Ascent Hydro Projects Ltd.	Sorda	4.50	Shimla					
10	HPSEBL	Baspa Aug.	4.50	Kinnaur					
11	HPSEBL	Nogli	2.50	Shimla	220/66/22 kV Sub-Station Nogli				
12	HPSEBL	Chamoli	10.00	Shimla	66/22 kV S/Stn Chamoli				
13	Rungaraju Wire Housing Pvt Ltd	Semra	14.00	Shimla					
	Sub Total		86.00				103.2		
14	HPSEB	Chaba	1.75	Shimla	15kV Sub Station Chaba			132/66/33kV S/Stn Aropli - 220/132kV S/Stn. Kunihar	
15	HPSEBL	Bhoyjung	2.00	Lahaul Spiti	22kV Sub Station Kaza				
	Basin Total		89.75				107.7		

1	2	3	4	5	6	7	8	9	10
d)	**Area- Yamuna Basin**								
1	Goodhani Hydro Electric Co (P)	Andhra-II	5.00	Shimla	66/22kV S/Stn Andhra			66/22kV S/Stn Nanabh - 220/66/22kV S/Stn Kotla - 220/132kV S/Stn Kumhar	
2	HPSEBL	Andhra	10.95	Sirmaur					
3	M/s Himbase Vidyut Rural electric Co-Operative Society Ltd Rajru	Jabbal	2.00	Shimla					
4	M/s Rajvan Venture Hydropower	Gumma-II	2.00	Shimla	22kV S/Stn Gumma				
5	HPSEBL	Giri-Ala	3.00	Shimla					
6	Hyderabad Oil Power Enterprises Pvt Ltd	Chirgi	1.00	Shimla	22kV S/Stn Hatkoti				
7	M/s Ajay Energy & Power Corporation Pvt Ltd	Dugn	2.50	Shimla	22kV S/Stn Hatkoti				
8	M/s Nuziveedu Seed Ltd A-105 Phase II Sector-III Nem Shimla-171006	Mayli	3.00	Shimla	66/22 kV S/Stn Shimli				
9	M/s R.K. Gupta, Hamal Hydro Ltd Furchhola	Hamal	2.00	Shimla	22 kV S/Stn Chopal				
	Sub Total		29.95				47.94		
10	Himshakti Project Pvt Ltd	Sang	5.00	Shimla	33kV S/Stn Shilai			132/33kV S/Stn Pachna - 132/33kV S/Stn Giri - 132/33kV S/Stn Solar	
11	Himalayan Crest Power Ltd	Timbi	5.00	Sirmour					
12	Himalayan Crest Power Ltd	Chandni	5.00	Sirmour	33 kV S/Stn Sataual				
13	Himalayan Crest Power Ltd	Manal	2.00	Sirmour					
14	Shangram Energy Development Co Pvt Ltd	Pallo	5.00	Sirmour	33kV S/Stn Dadahu				
	Sub Total		17.00				20.4		
	Basin Total		46.95				68.34		
e)	**Area- Chenab Basin**								
1	HPSEBL	Tissa	4.59	Lahaul Spiti	33kV Sub Station Patlikuhl			132/33kV S/Stn Bajaura - 220/132/33kV S/Stn Kangoo - 220/132kV S/Stn Kumhar	
	Basin Total		4.59						
	Grand Total		442.39				511.1		

Data for Renewable Energy Resources and its Transmission Infrastructre

Name of the State Himachal Pradesh

(B) Future- Potential Locations and Capacity (MW)

Wind	
Solar PV	
Solar Thermal	
Small Hydro	1916.98
Biomass/Waste to Energy	

(C) RES Capacity Addition Programme in 12th Plan (MW)

	2012-13	2013-14	2014-15	2015-16	2016-17
(i) Type					
Wind					
Solar PV					
Solar Thermal					
Small Hydro	105.46	219.65	165.15	307.46	198.02
Biomass/Waste to Energy					

HP

Data for Renewable Energy Resources and its Transmission Infrastructure

Name of the State: Himachal Pradesh

(A) Network Connectivity for above Proposed Capacity addition, if any

Type: SHP

(i) Area: Beas Basin

S. No.	Developer	Project Name	Installed Capacity (MW)	Location (Dist)	Proposed Transmission Scheme (details like name of line (D/c or S/c), voltage level (kV), length, Conductor type etc.		Maximum injection (MW)	Name of 220kV STUHPSEBL S/s for above injection	7% System beyond injection point
					Immediate Evacuation/ Interconnection point	Associated Strengthening, if any			
1	2	3	4	5	6	7	8	9	10
1	A Power Himalayas Ltd.	Beas	2.25	Kullu	33/11 kV S/Stn. Palchan			33/220kV S/Stn. of AP Hydro	220/400kV S/Stn. PGCIL Nalagarh
	Sub Total		2.25						
2	Haindi Hydro Electric Project	Haindi Nalah	7.00	Kullu	Proposed 33kV Switching Station S/Stn. Palchan	Laying of AB cable on existing structure between Palchan to Prini 10.5 Km.			
3	NSJV Projects Private limited Banglore	Palchan Bhang	9.00	Kullu					
4	Harnali Nala Hydro Power Project Co. Op. Society Ltd.	Beas Kund Top	2.00	Kullu					
5	Sai Ung Hydel Project(P) Ltd	Bhang	9.00	Kullu					
6	Kalinir Hydro Power Private Limited	Shang	1.00	Kullu					
	Sub Total		21.00						
	Others		60.00						
	Total-I		84.85				107.82		
7	Alex Manali Hydro Power Pvt. Ltd	Algo-II	4.00	Kullu	33/11 kV S/Stn. Prini	The construction of 33 kV S/C line on D/c structures with twin conductor (32Km) between Prini & Nagar		Proposed 33/220kV S/Stn. Fozal	220/400kV S/Stn. PGCIL Nalagarh
8	Woodmillers Power Company (P) Ltd	Chhoi	5.00	Kullu					
9	APCL Vision Power (P) Ltd	Kuthli	1.50	Kullu					
10	Himgiri Hydropower Co. (P) Ltd	Lower Alco	2.50	Kullu					
11	Apna Hydro Electric Projects	Dhungan	10	Kullu					
12	Mahalaxmi Hydro Power (P) Ltd	Manali Power	0.62	Kullu					
13	Manta Green Hydro Pvt. Ltd	Zalnala	0.50	Kullu					
14	Ram Tukar Mini Hydro Project	Tukad	1.00	Kullu					
	Sub Total		13.00						
	Others		13.00						

15	Commercial Infra Tech (P) Ltd.	Bhagan Nallah	1.50	Kullu	Proposed 33/220kV S/Stn. Fozal				
16	Bloom Fozal Hydro Power Pvt. Ltd.	Baloot Fozal	4.60	Kullu					
17	Bisht Bhriga Enterprises Hydro Electric Power Projects (P) Ltd.	Solang	3.50	Kullu					
18	Fourseasons Marketing Pvt. Ltd	Shigri	2.60	Kullu					
19	Coral Hydro Power Ltd	Sarel	1.50	Kullu					
20	Alvora Power (I) Ltd	Solal Dangi	4.50	Kullu					
21	Fozal Power Pvt Ltd	Fozal	9.00	Kullu					
22	Kanchanjunga Hydro Power Ltd	Bhrigukul	24.00	Kullu					
23	Sutlej Construction Ltd	Keyas	4.55	Kullu					
24	Rishi Bhriga Enterprises Hydro Electric Power Projects (P) Ltd	Kukri	3.00	Kullu					
25	Harigar Power Company	Pakhoo	2.50	Kullu					
26	K K K Hydro Power Ltd.	Shanr	1.00	Kullu					
27	Harinder Thakur	Gajedal	1.50	Kullu					
28	Chandanda Hydel Project Pvt. Ltd	Kapri	1.00	Kullu					
29	Bhrigu Enterprises Hydro Electric Power Developer	Kathi	3.50	Kullu					
30	Rajvanshi Hydro Power Pvt. Ltd	Khoshi Nashla	1.00	Kullu					
31	Celestial Components (P) Ltd	Pharan	1.50	Kullu					
32	Chandrapa Hydel Project Pvt. Ltd.	Sangal-I	1.00	Kullu					
33	Water Fall Hydro Power Enterprises	Bagoo	1.00	Kullu					
	Sub Total		74.60						
	Others		25.00						
	Total-2		114.60				148.52		
34	Shuhla Hydro Power Pvt. Ltd	Gharang	5.00	Kullu	33/11 kV S/Stn. Kullu	Construction of 66 kV S/C line from Patlikuhl to Kangra via 66/33 kV S/Stn. at Kangra (40 Km on speed towers		132 kV S/Stn Kangra - 220/132 kV S/Stn. Kangra - 220/132 kV S/Stn Kullu	
35	The Rakanth Hydro Electric Co-op Society Ltd	Rajaj	2.00	Kullu					
36	Microways (I) Ltd	Sidhan	4.80	Kullu					
37	Ex Employed Engineers Labour and Construction Cooperative Society	Khojan	2.50	Kullu					
	Sub Total		13.30						
	Others		15.00						

38	WIL Power Projects Ltd	Jari	4.00	Kullu	33/11 kV S/Stn. Jari	33 kV S/C line on D/C structures with wolf conductor between Jari & Bajaura (X 4 No. Bays		
	Sub Total		4.00					
	Others		5.00					
39	Sun Power Ltd	Jiura	3.00	Kullu	132/33 kV S/Stn Bajaura	Augmentation of conductor to AL-59		
40	Himcomedisar Hydro (P) Ltd	Manikur	2.00	Kullu				
41	Adventure Hydro Power Pvt. Ltd	Hurla Top	1.00	Kullu				
42	Himcomedisan Enterprises	Panche	1.50	Kullu				
	Sub Total		7.50					
	Others		12.00					
43	Mandav Air Industries	Bagg	1.00	Mandi	33/11 kV S/Stn. Kamalo			
	Sub Total		1.00					
44	Galaxy Hydro Energy Dev. Co. Ltd	Barsee	3.00	Kullu	33/11 kV S/Stn. Hangar			
45	Pane- Hydro Power Project	Gharagha-II	1.00	Kullu				
	Sub Total		4.00					
	Others		5.00					
46	Shri Ram Sivat Hydro (P) Ltd	Keldu	1.80	Kullu	33 kV S/Stn. Sang			
47	Radhopreet Hydro Project (P) Ltd	Karsaul	2.40	Kullu				
48	Heli Minors	Jana-II	1.00	Kullu				
49	Shakun Lok Hydro Power	Beltch	3.00	Kullu				
50	Jaridugh Enterprises	Sang	1.00	Kullu				
	Sub Total		9.20					
51	Jejora Hydroelectric Power Generation Pvt. Ltd	Surdh	1.50	Mandi	Proposed 33/132kV S/Stn. Pandoh			Proposed 33/132kV S/Stn. Pandoh - 132/220kV S/Stn Kangoo - 220/132kV S/Stn. Kangoo
52	Jejora Hydroelectric Power Generation Pvt. Ltd	Sworal	5.00	Mandi				
53	A.S.J.M. Power Project Pvt Ltd	Jia	2.50	Mandi				
54	Bhartal Hydro Electric Project Pvt Ltd	Lalf Khad	3.00	Mandi				
	Sub Total		22.00					
	Others		5.00					
55	Vidyamitra Power Generating Co. Ltd.	Kotlung	1.20	Mandi	33/11 kV S/Stn. Dhakan			
56	Sun Gold Devices (I) Pvt. Ltd	Sun Ka Nala	3.00	Kangra				
	Sub Total		4.20					
	Others		2.00					

57	LSP Hydro Energy Limited	Bath Padar	4.00	Mandi	33/11kV S/Stn. Padhar	1) Augmentation of 33kV line from Padhar to Bijni 2) Ckt 33 kV line between Padhar & Bijni			
	Sub Total		4.00						
58	Shokti Hydro Electric Co. (P) Ltd	Chachyot	5.50	Mandi	33kV S/Stn. Gohar	LILO 33 kV line (Ref II 15Sq In) between Gohar and Mandi			
59	Sai Sun Hydro Power (P) Ltd.	Gohar-I	2.50	Mandi					
60	Sai Sun Hydro Power (P) Ltd	Gohar-II	3.00	Mandi					
61	Kinnergy Hydro Power Pvt. Ltd	Tunu Dari	1.00	Mandi					
	Sub Total		10.00						
62	Trident Power Systems Ltd	Lower Bhi	10.00	Mandi	132/33kV S/Stn. Bijni	Strengthening of 33 kV line between Pandoh & Bijni			
	Sub Total		10.00						
	Total-3		125.20				167.24		
63	Sandhya Hydro Power Projects Bhaglia (P) Ltd	Bhaglia	5.00	Kullu	Proposed 132/220kV S/Stn. Barsain	33 kV S/C line on DPC structure with wolf conductor between Barsaini & Jari for 4 No Bays		Proposed 132/220kV S/Stn. Barsain	220/400kV PGCIL S/Stn. Banala
64	Jai Tawaghi Hydro Power Project	Dachi	1.00	Kullu					
65	Sandhya Hydro Power Project	Shilla	1.00	Kullu					
66	Sandhya Hydro Power Project	Chaksil-II	7.00	Kullu					
67	Ignou Hydro Power (P) Ltd	Ignou	4.00	Kullu					
68	A.V. Forgings	Jiwa	2.50	Kullu					
69	Jai Radha Sug Hydro Power Pvt. Ltd.	Lugnag Khad	5.00	Kullu					
	Sub Total		19.50						
	Others		520.00						
70	Jindal Hydro Power Pvt. Ltd	Malana Lic	5.00	Kullu	Proposed 132/220kV S/Stn. Chor			Proposed 132/220kV S/Stn. Chor	
71	Arcona Columners Pvt. Ltd.	Sarbadi-II	5.00	Kullu					
	Sub Total		10.00						
	Others		135.000						
	Total-4		638.70				814.44		
72	Prodigy Hydro Power Pvt. Ltd	Baner-I	6.00	Kangra	33/11kV S/Stn. Banjar	1) 33 kV S/C Line from Sillipur to Baner & dismantling of 11kV 34 Ex Feeder 2) Augmentation of 33 kV Baner-Jhakri line (Circuit No 2) from Q.R. to Wolf Conductor		132/33kV S/Stn. Jhakri Proposed 132/220kV S/Stn. Dehar	220/400kV PGCIL Proposed S/Stn. Hamirpur
73	A.V. Chamundi Power Projects	Sunder	3.00	Kangra					
74	New Chamundi Hydro Projects	Baner	3.00	Kangra					
	Sub Total		12.00						
	Others		31.00						

75	Ranital Hydro Venture	Pong	2.00	Kangra	132/33 kV S/Stn Dehra	1) Augmentation of 33/132 kV Transformer from 2x16 to 2x25/31.5 MVA at Dehra & 132 kV line upto Kangra (25 Km)			
						2) Proposed 220/132 kV S/Stn. near Palampur b/w 220 kV line to Mattanwali to Palampur			
						3) Construction of 132 kV S/C line from Dehra to Baner p/w 2x25/31.5 MVA S/Stn			
						4) Construction of 132/33 kV 2x25/31.5 MVA Sub-Station at Chambi & Shahpur (2x 132 kV D/C line from Chambi to Tower			
						5) Augmentation of 33/132 kV, 3x31.5 spare 1 0 MVA/1 MVA transformer to 10.5/3 - spare 1 31.5 MVA x 3 MVA at Baijnath			
	Sub Total		2.00						
	Others		220.00						
76	Lim. Power Co. Pvt. Ltd.	Lahli	4.50	Kangra	33/11kV S/Stn Baijnath	Augmentation of existing 33 kV line from Baijnath to Dehra from 0.02 sq to Wolf Conductor		132/33kV S/Stn Dehra - Proposed 132/220 kV S/Stn Dehra	
77	Sun Venus Sangli Hydro Power (P) Ltd	Kothli Mata (Gaushala)	7.25	Kangra					
78	Sun Venus Sangli Hydro Power (P)	Kothli Mata	1.30	Kangra					
79	Binwa Power Co. Pvt. Ltd.	Bhiwadi	4.50	Kangra					
80	Bhawani Renewable Energy Private Limited	Binwa-IV	5.50	Kangra					
81	JAYA Energies	Banu	4.00	Kangra					
82	Ajay Kumar Sood Engineers & Contractor	Banad	1.50	Mandi					
	Sub Total		28.95						
	Others		110.00						
83	KU Hydro Power Pvt. Ltd	Lambadug	25.00	Kangra	33/132kV S/Stn. Baur				
84	UBALL Hydro Power Project Pvt. Ltd.	Baror	1.80	Mandi					
85	Pun Oil Mill Ltd	Lahli	9.00	Mandi					
	Sub Total		35.80						
	Others		10.00						
	Total -5		332.95				399.54		
86	Winsome Textile Ind. Ltd	Mamini	2.50	Kangra	33/11 kV S/Stn Sidpur	33 kV line from Sidpur to Kangra (SIK Ltd.)		132/33 kV S/Stn Kangra - 132/33 kV S/Stn Dehra - 220/132/33kV S/Stn Jawali	220kV Baspa to Hamirpur line.
87	IND-BARATH Energies Ltd.	Mamini-II	4.80	Kangra					
88	Prandha Hydro	Bhawanga	1.50	Kangra					
	Sub Total		8.80						
	Others		12.00						

89	Vogesh Power Ltd	Baner Sangam	5.00	Kangra	132 kV S/Stn Dehkata Rajnah			
90	Arcadia Power Projects	Bangana	5.00	Kangra				
	Sub Total		10.00					
91	Sainthia Power Promoters Pvt. Ltd	Uhagi	3.50	Chamba	220 kV S/Stn Sihuna	1) Cut 11kV SC line with Wolf Conductor from 33 kV Sub-station Jassour a/w intermediate poles & Shunting Towers 2) Cut 33kV S/C line with Wolf Conductor from Lahru overhead 220/ 33/33 kV S/Stn Jassour		33/132 kV S/Stn Jassour
	Sub Total		3.50					
	Others		1.00					
92	PuKu Hydel Projects Pvt. Ltd	Brahmi Top	3.00	Kangra	33/11kV S/Stn Shahpur			33/132 kV Jangpura S/Stn Chajchu-132/33/22kV S/Stn Jassour
93	Prashant Hydro Energies Pvt. Ltd	Brahmi-V	1.00	Kangra				
	Sub Total		4.00					
	Others		39.00					
94	Satluj Sun Hydel Projects	Gaj Top	3.00	Kangra	33/11kV S/Stn Gaj	Construction of 33 kV S/C line on 200 towers from Khanda-II HE P to Gaj a/w 2 No bays		
95	Kangra Hydro Power Venture (P)	Gaj-III	3.00	Kangra				
96	JAYA Enterprises	Legnd	2.00	Kangra				
	Sub Total		8.00					
	Others		15.00					
97	Sur Snow Hydro Power (P) Ltd	Kairi	2.00	Chamba	220/11kV S/Stn Chamba			
98	Sunjo Hydro Electric Company (P) Ltd	Dhabrah	2.00	Chamba				
99	B.R. Sun Engineers Power Projects Pvt. Ltd	Chalda	2.50	Chamba				
	Sub Total		5.00					
	Others		3.00					
	Total (A)		115.00				38.96	
	Alnar Lal Gupta	Chhanwda	0.20	Mandi	11kV S/Stn			
	The Investment Company	Magsmal	0.20	Chamba	11kV S/Stn			
	Upasha Energy	Thachatong	0.80	Kullu	11kV S/Stn Manali			
	Jai Durga Hydro Power Co.	Raskar II	0.20	Kullu	11kV S/Stn Rawalsar			
	The Pure Aire The Rainbow Hydro Power Co-Op Society Ltd	Dhara Khera	0.10	Kullu	33/11kV S/Stn			
	Sub Total		1.99					
	Basin Total		1135.09					

6) Ravi Basin

1	Gelna Hydro Power Ltd	Gelna	2.00	Chamba	220/33 kV Proposed S/Stn. Kartan	33 kV upgrading of Busbar System [illegible]		220/33 kV Proposed S/Stn. Kartan	[illegible]
2	Sneh Hydro Electric Power Projects Ltd	Galeth Ka Nallah	1.15	Chamba					
3	Atul Hydro Electric Project Ltd	Dal Ka Nallah	1.00	Chamba		2x11 kV Overlaying Chamba - Chaugh line at Kartan [illegible]			
4	Prabhu-2-2 Ltd	Bhaj-Tag	2.00	Chamba					
5	Kagi Power Pvt. Ltd	Dandi	1.20	Chamba					
	Sub Total		10.35						
6	Global Corporation Ltd	Dulghat	1.10	Chamba	33/11 kV S/Stn. Dughat				
	Sub Total		1.10						
7	Himgiri Infrastructure Development (P) Ltd	Sal-II	3.00	Chamba	33 kV Proposed Consul Point Mandi	33 kV Peeling Point at Mandi [illegible]			
8	[illegible] Hydro Power Pvt. Ltd	Bhi	4.50	Chamba					
9	Fire Hydro Generation (P) Ltd	Hal-II	3.40	Chamba					
10	Global Corporation Ltd	Kiri	2.50	Chamba					
11	Maha Mahesh Hydel Power Project Co-operative Society (Regd)	Dibbin	3.00	Chamba					
12	Sahu Hydro Power (P) Ltd.	Kurtha	5.00	Chamba					
	Sub Total		35.90						
	Others		80.00						
13	Himachal Hydel Projects (P) Ltd	Kuchal	4.90	Chamba	33/220 kV Proposed S/Stn. Lahal			33/220 kV Proposed S/Stn. Lahal	
14	Jaya Shakti Ltd	Sup	1.00	Chamba					
15	Himachal Hydel Projects (P) Ltd	Triung	3.00	Chamba					
16	V.B. Hydro Projects Pvt	Kuwarsi	5.00	Chamba					
17	Shree Hydro Power Pvt. Ltd.	Saraweri	2.50	Chamba					
18	Jagdambay Hydro Projects	Kuwarsi-II	5.00	Chamba					
19	Snow Valley Hydro Power (Partnership Firm)	Chobio-I	5.00	Chamba					
20	RC Hydro Projects	Dug	3.00	Chamba					
21	Shree Hydro Power Pvt. Ltd.	Chaujar-I	2.50	Chamba					
22	Kinar Hydro Projects	Kinar	3.00	Chamba					
23	Marzian Hydro Power Corporation Pvt Ltd	Kuwara	3.00	Chamba					
24	[illegible] Ltd	Dhali-II	3.00	Chamba					

25	Sterlite Energy Pvt. Ltd	Chegdar-II	9.00	Chamba					
26	R.S. Hydro Project	Rakch	1.00	Chamba					
27	Swadesh Distilleries (P) Ltd	Sikar	4.00	Chamba					
28	Jagdamba Hydro Projects	Tarai Kandi	5.00	Chamba					
29	Chamba Hydro	Ghana Tap	2.00	Chamba					
	Sub Total		68.42						
	Others		15.08						
	Total - I		123.00				149.32		
30	Himpower Associates (P) Ltd	Kalhel Chari	2.50	Chamba	33/11 kV S/Stn. Kuti	1) 33 kV strengthening of Busbar System at Kuti and provision of augmentation of conductor from Dug to Wall of Chamba-Kuti-Bachei 26.4 Sendu Line. 2) C/O 33 kV S/C Line from Salmoto Kuti also terminal equipment		132/33 kV S/Stn. Ballu - 33/132/220 kV S/Stn. Jassure	220 kV Rore Stn. Pong interstate line
	Sub Total		2.50						
	Others		2.00						
31	Himdun Power (P) Ltd.	Bhirwan	2.00	Chamba	Proposed 33/132 kV S/Stn. Kurthala	Construction of 2x50/63 MVA Sub-Station at Kurthala and 132 kV D/C line from Kurthala to Ballu at Distt. Chamba			
32	Church Valley Fruit Veg. & Flower Marketing Dev. Co-Op Society	Chirin Tepa	5.00	Chamba					
33	Upper Bari Power Generation (P)	Jaiwar	5.00	Chamba					
34	Jaiwar Hydro Power Projects Pvt.	Jaiwar-II	5.00	Chamba					
35	Sangee Funana Pvt. Ltd.	Alwas	2.60	Chamba					
36	Chatri Hydro Power (P) Ltd	Chatri-I	5.00	Chamba					
37	Techman Infra Ltd.	Gokul	5.00	Chamba					
38	Techman Infra Ltd.	Dhirwan	5.00	Chamba					
39	Nirmal Hydro Power Consultancy Pvt. Ltd	Hyrrat	1.00	Chamba					
40	Techman India Ltd	Kathela	5.00	Chamba					
41	Bhadra Mata Hydro Electric Power (Pvt.) Ltd	Kamal	2.00	Chamba					
42	Parvati Hydro Power Pvt. Ltd	Chungal	15.00	Chamba					
43	Venture Energy Technologies	Sai Kothi	15.00	Chamba					
44	Dabar Engineering & Power Projects (P) Ltd	Chatri Champ	[illegible]	Chamba					
45	Mercury Systems (P) Ltd	Kalhi	2.00	Chamba					
46	Techman India Ltd	Mangal	[illegible]	Chamba					

47	Sabre Energy Pvt. Ltd	Mazga	3.00	Chamba						
48	Technoo Hydro Ltd	Purvada	1.50	Chamba						
49	Himsar Power (P) Ltd	Upper Chanju	4.00	Chamba						
50	PKS Hydro Power (P) Ltd	Balsio Top	5.00	Chamba						
51	Sidh Metals Pvt. Ltd	Lower Mahkar	5.00	Chamba						
	Sub Total		99.60							
	Others		259.00							
52	Suil Bara Hydro Projects Ltd	Suil Bara-I	5.00	Chamba	33/11 kV S/Stn. Salooni	1) COD 33kV line from 33kV S/Stn. Bhaniyari to Chhota 220 terminal bays at both ends.				
53	Gujarat Coastal Construction Limited	Suil-I	5.00	Chamba		2) COD of 33 kV line (22Km) from Holi to Chhota 220 terminal bays.				
54	JKVA Hydro (P) Ltd	Suil-II	5.00	Chamba		3) Augmentation of existing 33 kV line from Holi to Chamba				
	Sub Total		14.50							
	Others		15.00							
	Total-2		383.60					461.32		
	Basic Total		507.20							

c) Aryn-Satluj Basin

1	Sai Engineering Foundation	Pangi	3.00	Kinnaur	220/66/22 kV Proposed Sub Station at Bhokhos	Construction of 220/66/22 kV GIS Sub-Station at Bhokhos w/ 3 No. bays		66/22kV/400 kV Proposed S/Stn. at Wangtoo	400 kV Wangtoo - Lahli Hapur Line
	Sub Total		3.00						
	Others		99.00						
2	Tirath Hydro Power Ltd	Rahi	9.00	Kinnaur	66/22kV Proposed Pooling Station at Wangtoo				
3	Himon Energy Pvt. Ltd	Hangar Chunnuda	9.50	Kinnaur					
4	Sawra Valley Hydro Power Ltd	Wanger House	24.00	Kinnaur					
5	Ramesh Hydro power Pvt. Ltd	Sehi Maraiya	24.00	Kinnaur					
	Sub Total		67.10						
	Others		100.00						
6	DL Power Pvt. Ltd	Baura	8.00	Kinnaur	66/22 kV Proposed S/Stn. Urni				
7	Chandigarh Distillers & Bottlers Ltd. Chandigarh	Rorre-II	22.00	Kinnaur					
8	Darjeeling Power Ltd.	Sipatog	2.00	Kinnaur					
	Sub Total		31.00						
	Others		15.00						
	Total-I		446.10				NIL		
9	Ker Energy Pvt. Ltd	Kol	24.00	Shimla	220/66/22 kV Sub-Station, Kotla	1) Scheme for augmentation of 220/66 kV 25/31.5 MVA to 80/100/40 MVA transformer		220/66/22 kV S/Stn Kotla - 220/132 kV S/Stn. Rampur	
10	DL Power (India) Pvt. Ltd	Chanoda	2.40	Kinnaur					
11	DL Power (India) Pvt. Ltd	Sarlari	1.50	Kinnaur					
12	Solding Hydro-tel (P) Ltd	Solding	5.00	Kinnaur		2) Augmentation of 66/22 kV 2x10 MVA transformer 2x25/31.5 MVA at Kotla			
13	Yadlapal Agro-products (P) Ltd	Rok	5.00	Shimla					
14	Mini Power Pvt. Ltd.	Upper Mergiloc	2.00	Shimla					
15	Tejamkar Power (I) Pvt. Ltd.	Zero	5.00	Shimla		Augmentation of 66/22 kV 1x10 to 25/31.5 MVA at Nogli s/s associated 7 No. bays			
16	Sirma Energy Resources Pvt. Ltd	Karagal	2.00	Shimla					
17	Vinda Hydro Power (P) Ltd	Upper Kunlo	2.00	Shimla					
18	Sigma Hydel Projects Pvt. Ltd	Badhal	1.00	Shimla					
	Sub Total		55.90						
	Others		15.00						
19	Karmi Energy Ltd	Karmi	5.10	Shimla	66 kV S/Stn. Chanso-II	LILO of 66 kV Jaiti - Nogli Chanso stage-I at Chanso-II			
20	Sarra Nirmal Hydel Power Pvt. Ltd	Upper Sarra	2.00	Solan					
21	Sirmi Hydro Power Pvt. Ltd	Upper Sirmi	12.00	Shimla					
22	Sarra Chuda Hydro Energies Pvt. Ltd	Sarra	3.00	Shimla					
	Sub Total		22.00						
	Others		22.00						

23	Regova Energy Ltd	Karchham	5.00	Kinnaur	66/22 kV Nathpa Sub-Station	Augmentation of Power Transformer Capacity 20 MVA at 66/22 kV Sub-Station Nathpa along with 2 No. Bays.	
24	Sagar Hydro Projects Ltd	Melon	4.50	Kinnaur			
	Sub Total		9.50				
	Others		13.05				
25	Ravinder Hydro Power Limited	Seoni-II	5.00	Shimla	22 kV Chirgaon Power House		
	Sub Total		5.00				
26	Shri Khand Mahadev Hydro Power Pvt Ltd	Dewar	3.50	Kullu	66/22 kV Proposed S/Stn Bagipul		
27	Tung Hydro Electric Power Ltd	Kurpan	5.00	Kullu			
28	Haripriya Power Pvt Ltd	Lower Kurpan-II	4.00	Kullu			
29	Eurgeko Power Projects Pvt Ltd	Urla	14.50	Kullu			
30	Sarikhand Mahadev Hydro Power Pvt Ltd	Shirshakar	8.00	Kullu			
31	Kurpan Valley Hydro Power Projects	Bagipul	4.00	Kullu			
	Sub Total		37.00				
	Others		25.00				
32	Silversel Energy Company Ltd	Ani	5.00	Kullu-Mandi	66/22 kV Proposed S/Stn Ani	Augmentation of 66/22 kV 1x10 to 2x31.5 MVA at Sepla along associated 2 No. Bays	
33	Himachal Hydro Power Projects Pvt Ltd	Bertoni	3.00	Kullu-Mandi			
34	Sun Shine Hydro Electric Power (P) Ltd	Shirshla	1.75	Kullu			
35	ABB Power (P) Ltd	Anni-II	1.50	Kullu			
36	ABB Power (P) Ltd	Anni-III	1.50	Kullu			
37	Swanini Hydro Power (P) Ltd.	Chhaini	1.70	Mandi			
38	Swanini Hydro Power (P) Ltd	Sind	2.00	Kullu			
39	Swanini Hydro Power (P) Ltd	Rana Bagh	2.00	Kullu			
40	Sarai Infra Tech Pvt Ltd	Anni-IV	4.00	Kullu			
	Sub Total		24.00				
	Others		1.00				
41	Chandeland Hydro Energy Projects	Chandeland	1.50	Shimla	22kV Chirgaon Power Stn		
	Sub Total		1.50				

42	Rajtar Hydro Power (P) Ltd	Rajpur	4.50	Solan	66/22 kV Nagli S/Stn				
43	Gandhan Hydro Power Pvt. Ltd	Jangini	12.00	Shimla					
	Sub Total		16.50						
	Others		45.00						
44	Sai Hydel Power Ltd	Manali	6.00	Mandi	33/132/220kV S/Stn Kangoo				
	Sub Total		6.00						
	Total-2		388.70					270.44	
45	Swanni Hydro Power (P) Ltd	Chhatru	1.70	Mandi	66/22kV S/Stn Tunnu			66/22kV S/Stn Tunnu - 132/66/33kV S/Stn Jaingi - 220/11/0.4 LV S/Stn Kandar	
	Sub Total		1.70						
46	Kanwen Thakur	Arnun	2.25	Mandi	22kV S/Stn. Chidha				
47	Shah Power Hydro Project	Acchu-Bagh	2.00	Shimla					
48	Karsog Valley Hydro Power Project	Gram Bhuiun	1.25	Mandi					
	Sub Total		8.00						
	Total-3		10.60					12.32	
49	Abdiya Hydro Power Projects	Pughwin	0.80	Shimla	33/11kV S/Stn				
50	Tenzen Bodh	Rarang	1.50	Lahaul & Spiti	22kV Tabo				
	Sub Total		2.30						
	Basin Total		787.30						

d) **Area-Yamuna Basin**

1	Giri Hydro Renewable Power (P) Ltd	Shaed	3.00	Shimla	66/22 kV S/Stn Andhra	1) Additional 66/22 kV, 1x25/31.5 MVA Transformer at Andhra Power House		66/132, 220 kV S/Stn Sunda - 220 kV Switching Station Hatkoti - 220/400 kV S/Stn, Pragati Nagar	400 kV Nagrota - Bhadlaour Line
2	Himalaya Vidyut Rural Electric Co-operative Society Ltd	Jabha	2.00	Shimla					
3	Rotyom Pharmaceuticals (P) Ltd	Peja	3.00	Shimla		2) 66 kV D/C line from Andhra to Sainj PS (220/66) kV			
4	National Engineers & Contractors	Todra	1.50	Shimla					
	Sub Total		13.50						
	Others		35.00						
5	Ranjan Venkateshwara Rai Power (P) Ltd	Gumma-II	2.50	Shimla	220 kV Gumma Power House	1) 22 kV line SC between Gumma and Andhra PH			
6	Shree Venkateshwara Enterprises	Khanyara	2.00	Shimla		2) Construction of 22 kV bays for interconnection facilities to IPPs at Gumma and Chirgaon			
7	Sai Engineering Foundation	Shimla	5.00	Shimla					
	Sub Total		9.50						
	Others		5.00						
8	Vijay Singh Thakur	Asu-Dodra Kwar	2.00	Shimla	132 kV Pooling Station at Ropa				
9	Bhageshwari Hydro Power Projects Pvt. Ltd	Barna	4.50	Shimla					
10	Rajender Kumar Pirta	Kwar	3.00	Shimla					
11	Mountain Mover	Sara	1.50	Shimla					
12	Bhirasre Hydro Power Projects Pvt Ltd	Saru	2.00	Shimla					
13	Chandwar Hydro Powers	Sanwl	3.00	Shimla					
14	Bhirasar Hydro Power Projects Pvt Ltd	Tela	2.00	Shimla					
15	Tribhi Chauhan	Wawda	2.00	Shimla					
16	Pramod Dutta	Bisru	4.00	Shimla					
	Sub Total		22.00						
	Others		75.00						
17	Tangnu Romai Power Generation (P) Ltd.	Tangnu Romai-II	6.00	Shimla	132 kV pooling station at Tangnu Romai HEP				
	Sub Total		6.00						
	Others		91.00						
18	Greenko Harkoti Energy Pvt. Ltd	Poudwa Lassa	24.00	Shimla	220kV S/S Harkoti				
	Sub Total		24.00						
	Others		500.00						
	Total - I		700.00				936.96		

19	Hungin Jal Vidyut Pvt. Ltd.	Nera	1.00	Sirmour	33 kV Sub-Station Shilai	33 kV S/C line on D/C Structure between Shilai and Sumab a/c terminal bays		33/132kV S/Stn Paonta - 33/132kV S/Stn. Giri - 33/132kV S/Stn. Sidan	
20	BL A Shalvi Hydro Power (P) Ltd	Shalvi	4.75	Solaida					
21	Manglam Energy Development Co Pvt. Ltd	Palwal-II	4.50	Sirmour	33/11 kV S/Stn Dadahu	33kV S/C line between Sarum & Paonta			
22	Surender Singh Thakur	Dharmla	1.20	Sirmour	33/11 kV S/Stn Rajgarh				
23	Green Neomino Energy	Giri-III	3.00	Sirmour	Giri Power House				
24	Sidhi Constructions Ltd.	Chuma	3.00	Sirmour	33/11 kV S/Stn Chaura				
	Sub Total		18.05						
	Others		10.00						
	Total-2		28.05				45.66		
25	Ajay Energy & Power Corporation (P) Ltd	Dugri	2.50	Shimla	22kV Control Point Halkoti	1) 22 kV S/C line from Sumob to Halkoti (20 Km)			
26	Shirdi Industries Ltd.	Salani	1.50	Shimla					
27	Vishal Exports Overseas Ltd.	Jakhi	1.50	Shimla					
28	Iravat Ropin Valley Jalvidyut Sanchar Sabha Simla	Ropin	1.00	Shimla		2) 22 kV S/C line from Halkoti to Koukhar.			
29	Tons Valley Hydro Power	Sabun-I	1.00	Shimla					
	Sub Total		7.50						
	Others		3.00						
30	Himal Hotel Limited	Himal	2.00	Shimla	22 kV Control Point Jhiknipul				
31	Lucky Power Projects Co Operative Society Ltd	STP-Boragaon	0.50	Shimla	33/11 kV S/Stn. Khabra				
	Shogin Dev Hydro Power (P) Ltd.	Bashar	5.00	Shimla					
	Shogal Dev Hydro Power (P) Ltd	Bashar-I	5.00	Shimla					
	Shivang Indra Power Projects	Dhamala	1.48	Sirmour					
	Malaber Hydro Power Pvt. Ltd	Baraj	1.00	Sirmour					
	Iravat Ropin Valley Jalvidyut Sanchar Sabha Simla	Mawa	1.00	Shimla					
	Sub Total		13.98						
	Total-3		23.48				29.38		
	Basic Total		843.33						

4. **Area- Chenab Basin**

1	Simran Sharma & Sai Lines Real Estate Pvt. Ltd	Ajog	5.00	Chamba	33/11kV S/Stn. Pangi			132/33 kV S/Stn. Bathri - 33/132 220kV S/Stn. Jaspre	220kV Harsh Stn - Pang Interstate Stn
2	Bingo Power Pvt. Ltd.	Sanse	5.00	Lahaul & Spiti	33/220kV Proposed S/Stn. Sissu			33/220kV Proposed S/Stn. Sissu	220/400kV Proposed S/Stn. Sissu
3	Shiastra Hydro Power Projects Co-Op Society	Shuthra-I & II	2.00	Lahaul & Spiti					
	Basin Total		14.00				16.80		
	Grand Total		3693.32						

HIMACHAL PRADESH ELECTRICITY REGULATORY COMMISSION
KEONTHAL COMMERCIAL COMPLEX KHALINI, SHIMLA-171002.
(Tel.No.0177-2627262, Fax No.0177-2627162, E-mail: hperc@rediffmail.com)

No:PA:CHM:HPERC:2011-178-179 Dated: 18-01-12

To

Sh. Y.K.Sehgal,
Executive Director (Smart Grid),
PowerGrid Corporation of India Ltd.,
SAUDAMINI, Plot No.2,
Sector 29, Gurgaon, Haryana – 122001

Sub:- Identification of Transmission infrastructure for likely capacity addition of RE based power plants in 12th Plan.

Ref: 1. Letter No C/SG/06/Res/02 dated 08.12.2011 and 05.01.2012.
2. Presentations/discussion in Working Group on RE on 12.01.2012 at Chennai.

Sir,

Detailed information on the format circulated by Power Grid was sent by STU/HP TRANCO on 07.01.2012, which has been prepared in consultation with Nodal Agencies i.e. State Directorate of Energy and HIMURJA and also with DISCOM i.e. HPSEB Ltd. coordinated by HP Commission.

During the discussion in Working Group the representative of POWERGRID wanted that we send segregated list of schemes likely to be commissioned in each year of the 12th five-year plan. The list is enclosed.

For the purpose of clarity, information supplied in the formats circulated by POWERGRID is explained as under:-

(a) Identified potential of SHPs (upto 25 MW) in HP is about 2350 MW.
(b) Details of 443 MW capacity commissioned, as given in Format A, include those projects also which are likely to be commissioned by 31.03.2012.
(c) Of the balance potential of about 1900 MW, 247 projects with aggregate capacity 996 MW are planned for commissioning in 12th plan period, network connectivity proposed for these have been shown in Format C(ii).
(d) The proposed network connectivity for these projects have aggregate capacities of about 3600 MW. In the mountains due to corridor, environmental, land, design and aesthetic constraints, we have to have common lines for evacuation and transmission of power from various capacity projects and also for near future possible capacities. Hence the common network is proposed for these SHPs alongwith higher capacity projects in 12th Plan and SHPs coming in 13th plan period, which have been shown as "Others" in the list.

During the working group meeting at Chennai, it was presented by CRISIL that tariff implications of RE is negligible and in some States it is negative on account of various factors. However, in case of SHPs, unlike in bigger projects where project line up to interconnection point is part of the project cost, interconnection is at bus bar or at the nearest DISCOM system, and hence the cost of evacuation system up to interconnection

point of STU is additional cost). Hence real cost is higher than that is reflected in tariff, therefore, there is need for financial support in creating connectivity network – Evacuation system (33kV and 66kV) up to interconnection point of STU mainly done by DISCOM and as per estimates average cost of setting up of evacuation system up to STU point is Rs. 67.00 lacs per MW and therefore, total cost involved in 12th plan is about Rs. 670.00 crores. In addition, estimated cost of common STU system projected up to CTU injection point is about Rs. 2300.00 crores, about 30% capacity of such system will be used by SHPs during 12th plan.

Solar and Wind technologies have large potential in the country as against SHPs. However, SHPs should also require equal focus and priority in development and promotional strategies at the national level also, keeping in view the following advantages:-

(a) Aggregate energy generation against installed capacity in MW is about 2.5 to 3 times of wind and solar installations because of higher CUF (more than 50% without pondage).
(b) Useful life of project is longer, which 40 years in HP.
(c) Firm power
(d) Reasonable and stable tariff.

(Subhash C Negi)
Chairman,HPERC.

Copy to :-

Sh. Ashok Sharma, General Manager (C&D),HPPTCL, Barowalia House, Khalini, Shimla-171002.

(Subhash C Negi)
Chairman,HPERC.

HIMACHAL PRADESH

List of project likely to be commissioned during the year 2012-13.

Sr.No	Firm Name	Address	Project Name	Stream	Basin	Cap MW	Distt.
1	Mani Mahesh Hydel Power Project Co-operative Society (Regd)	Dhali House, Mohalla Sapu, Chamba (H.P.)-176310.	Dikleri	Sal	Ravi	2.00	Chamba
2	Sur. Shine Hydro Power (P)Ltd	Sahil Plaza Dalhousie Road, Pathankot-145001 Dist Gurdaspur	Kalu	Kalu	Beas	2.00	Chamba
3	Himachal Hydel Projects (P) Ltd.	SCO 263, Sector-14, Panchkula (Haryana)-134113	Kothed	Kothed	Ravi	4.50	Chamba
4	Himgiri Infrastructure Development (P) Ltd.	91/9 Trikuta Nagar Jammu Tawi Jammu (J & K) 180012	Sal-II	Sal	Ravi	3.00	Chamba
5	Jala Shakti Ltd.	2-411, Kanchanjunga Block, Aditya Enclave, Ameerpet Hyderabad (A.P.)500016.	Sup	Sup	Ravi	1.00	Chamba
6	Himachal Hydel Projects (P) Ltd.	SCO 263, Sector-14, Panchkula (Haryana)-134113	Tulang	Tulang	Ravi	3.00	Chamba
7	Shagi Hydro Electric Company (P) Ltd.	304, Model Lal Dock, Ashad Village, Khel Gaon, Marg New Delhi-110049.	Ubdirah	Ubdirah	Beas	2.40	Chamba
8	Lunr Power Co. Pvt Ltd.	C/O Subhash Projects & Marketing Ltd., Subhash House 27/2 Okhala Industry Area Phase-II New Delhi-110020	Lunr	Lunr	Beas	4.50	Kangra
9	Winsome Textile Ind. Ltd.	SCO 191-192 Sector 34-A Chandigarh-160022	Manuni	Manuni	Beas	2.50	Kangra
10	Darjeeling Power Ltd.	214, Empire House, 3rd Floor, Dr. D. N. Road, Fort Mumbai-400001	Sharang	Sharang	Satluj	3.00	Kinnaur
11	Alec Mandi Hydro Power Pvt. Ltd.	B-173, Sector 41, Noida-201303, NCR-Delhi	Alec-I	Allain Dhar	Beas	4.80	Kullu
12	Growel Energy Company Ltd.	1- Electronics Complex, Chambaghat, Solan Distt.Solan.173213 (H.P.)	Ani	Ani	Satluj	5.00	Kullu-Mandi
13	A Power Himalayan Ltd.	Regency Complex, River View Road, Paonta Sahib (H.P.) 173025	Beas	Kothi	Beas	2.25	Kullu
14	Himadri Hydro Power Projects Pvt Ltd	1- Electronics Complex, Chambaghat, Solan Distt.Solan.173213 (H.P.)	Sainj-I	Ani	Satluj	3.00	Kullu-Mandi
15	Waterminillers Power Company (P) Ltd	C/O Bubloo Office quarters Sainj-II Kullu Distt, Kullu (H.P.)-175126	Chhur	Chhur	Beas	1.00	Kullu
16	Shopia Hydro Power Pvt. Ltd	Shopia Complex, Dhalpur, Kullu (H.P.)-175101	Gaunang	Sarwari	Beas	3.00	Kullu

17	Continental Infra Tech (P) Ltd.	301 Meridian Plaza, Ameerpet, Hyderabad-500016	Haripur Nal	Pakhroj	Beas	1.50	Kullu
18	Sasi Power Ltd.	A-60 Okhla Industrial Area Phase-II New Delhi-110020	Hurla	Hurla	Beas	3.00	Kullu
19	Shri Ram Shyal Hydro (P) Ltd.	267, Masjid Moth, Uday Park NDSE Part-II, New Delhi-110049	Kullu	Kullu	Beas	1.50	Kullu
20	Shri Shanti Hydro Electric Power (P) Ltd.	Sunil Road Lalit Nagar Sunder Nagar Distt. Mandi (H.P.)-175401	Shamshar	Shamshar	Satluj	1.50	Kullu
21	DSP Hydro Energy Limited	Highway Building, Main Bazar Ner Chowk, Mandi-175008 (H.P)	Bath Padhar	Uhl	Beas	4.00	Mandi
22	Murari Lal Gupta	VPO Gohar, Distt. Mandi (H.P.)	Chawanda	Juni	Beas	0.20	Mandi
23	Ravipati Venkatesheswara Rao Power (P)Ltd.	Plot No. 108, My Home, Mountview Apartments, Navodaya Colony, Hyderabad (A.P.)-500073	Gumma-II	Gumma	Yamuna	2.50	Shimla
24	Himal Hydel Limited	House No.613-P, Sector 16, Panchkula (Haryana)	Hanol	Hanol	Yamuna	2.00	Shimla
25	Shree Venkateshwara Enterprises	609, Basant Vihar, Kasumpti, Shimla 171009	Khanyara	Khanyara	Yamuna	2.00	Shimla
26.	Kut Energy Pvt. Ltd.	Kut Energy Pvt. Ltd., Shimla.	Kut	Kut	Satluj	24.00	Shimla
27	Podigy Hydro Power Ltd.	Podigy Hydro Power Ltd., Kangra.	Baner-II	Baner-II	Beas	6.00	Kangra
28	Kurmi Energy Ltd.	Kurmi Energy Ltd., Shimla	Kurmi	Kurmi	Satluj	8.00	Shimla

105.45

List of project likely to be commissioned during the year 2013-14.

Sr.No	Firm_Name	Address	Project_Name	Stream	Basin	Cap_MW	Distt.
1	Gehra Hydro Power Ltd.	B-14, 2nd Lane Sector-II, New Shimla-171009	Gehra	Gehra	Ravi	2.00	Chamba
2	Himpower Associates (P) Ltd	Dull House, Mohalla Sapri Bazar, P.O Chamba Distt. Chamba	Kalhel Chairi	Chairi	Ravi	2.50	Chamba
3	Suil Barot Hydro Projects Ltd	214, Empire House (Basement) Dr. D. N. Road (Ext.) A. K. Nayak Marg Fort Mumbai-400001	Siuk Barot	Suil	Ravi	4.50	Chamba
4	Gujarat Coastal Construction Limited	610, Yashkamal Building, Station Road Sayajiganj Baroda (Gujarat) 390005	Suil-I	Suil	Ravi	5.00	Chamba
5	KVA Hydro (I) Ltd.	418-419, Paradise Complex, Sayajiganj, Baroda-390005	Suil-II	Suil	Ravi	5.00	Chamba
6	Yogendera Power Ltd	Tanda Road, Shahpur, Distt. Kangra	Baner Sangar	Baner	Beas	5.00	Kangra
7	Surya Sai Hydel Projects	Jaginder Nagar Mandi	Gaj Top	Gaj	Beas	3.00	Kangra
8	Kangra Hydro Power Venture (P) Ltd.	VPO Ranital, Distt. Kangra H.P.-176029	Gaj-III	Gaj	Beas	3.60	Kangra
9	Sant Prem Singh Hydro Power (P) Ltd.	Dohra Kunj, Tuapuri Baijnath Distt. Kangra	Keohali Mat	Sanali	Beas	2.25	Kangra
10	Sant Prem Singh Hydro Power (P) Ltd.	Dohra Kunj, Tuapuri Baijnath Distt. Kangra	Keohali Mat	Lana	Beas	1.20	Kangra
11	IND-BARATH Energies Ltd.	Plot No. J0-A, Road No-1, Film Nagar, Jubilee Hills, Hyderabad (A.P.)-500033.	Manimo-II	Manimo	Beas	4.80	Kangra
12	DLI Power (India) Pvt. Ltd.	Building No-2/RH-1, Vitava Enclave D.P. Road, Gandh, Pune-411007.	Chaunda	Chaunda	Satluj	2.40	Kinnaur
13	Regent Energy Ltd.	B-17/F-1, Mohan Co-Op-Ind. Estate, Mathura Road New Delhi-110044.	Karchrang	Sabring	Satluj	5.00	Kinnaur
14	Sai Engineering Foundation	Sai Bhawan Sector-4 New Shimla-171009.	Fangi	Fangi	Satluj	3.00	Kinnaur
15	Sandhya Hydro Power Projects Balargha (P) Ltd.	Hotel Sandhya Palace Shamshi, Kulla Distt. Kullu	Balargha	Parbati	Beas	5.00	Kullu
16	Bhoot Fozal Hydro Power Pvt. Ltd.	National Highway, Village Mohal, Kullu (H.P.)-175126	Dafoot Fozal	Fozal	Beas	4.60	Kullu
17	Galaxy Hydro Energy Dev. Co. Ltd.	VPO Bajaura, Kullu, Distt Kullu (H.P.)	Banera	Jaffer Kha	Beas	5.00	Kullu
18	Jai Jawala Hydro Power Project	C/o Thakur General Store, VPO Shamshi Tehsil & Distt Kullu	Barthi	Barthi	Beas	1.00	Kullu
19	Shri Khand Mahadev Hydro Power Pvt. Ltd.	House No. 31, Type-B, Lane-II, Sector-I, New Shimla-171009	Dewar	Dewar	Sainj	5.00	Kullu

20	Rishi Bhrigu Enterprises Hydro Electric Power Projects (P) Ltd.	VPO Nooli, District Kullu (H.P.)-175201	Gulang	Gulang	Beas	1.50	Kullu
21	WIL Power Projects Ltd.	217-A Industrial Area, Ludhiana-141003.	Jari	Parbati	Beas	5.00	Kullu
22	APEX Vision Power (P) Ltd.	702, Basant Vihar, Kasumpti, Shimla (H.P.)-171009	Kalath	Shilan-Sha	Beas	1.20	Kullu
23	Raghupreet Hydro Project (P) Ltd.	419/1-B, Sector-3, Phase-2, New Shimla, Distt Shimla-171009.	Karsaul	Karsaul	Beas	2.40	Kullu
24	Tadol Hydro Electric Power Ltd.	A-60 Okhla Industrial Area-II New Delhi-110020	Kurpan	Kurpan	Sutluj	5.00	Kullu
25	Baragarh Hydropower Co. (P) Ltd.	Baragarh Estate, PO Karan Kelo, Kullu	Lower Alco	Alco-Allai	Beas	2.50	Kullu
26	Bhuwaneshwari Hydro (P) Ltd.	B-40, Lane-1, Sector-2, Near Bus Stand, New Shimla (H.P.) 171009	Manihar	Manihar	Beas	2.00	Kullu
27	The Bailouth Hydro Electric Co-op Society Ltd.	New Vikas, Gandhinagar, Kullu-171601, H.P	Rojag	Rojag	Beas	1.00	Kullu
28	Fourseasons Marketing Pvt. Ltd.	215-217, Scendutz Chambers-II, 9, Bhikaji Cama Place, New Delhi-110066.	Sharan	Chelli	Beas	2.60	Kullu
29	Gumil Hydro Power Ltd.	Baragarh Estate, PO Karan Kelo, Kullu (H.P.)	Sirol	Hirori-Shi	Beas	1.50	Kullu
30	Sandhya Hydro Power Project	Hotel Sandhya Palace Shanashi, Kullu Distt Kullu	Shilla	Shilla	Beas	1.80	Kullu
31	Alvista Power (P) Ltd.	Vashist Bhawan, Village Rohan, P.O. Saproon, Solan (H.P.) -173211	Solet Dalwal	Fozal	Beas	4.50	Kullu
32	Shakti Hydro Electric Co. (P) Ltd.	D-160/2, Okhla Industrial Area Phase-I, New Delhi-110020	Chochyot	Juni	Beas	3.50	Mandi
33	Milestone Power Generating Co. Ltd.	58,Industrial Area,Sector-1, Parwanoo, H.P.	Roulang	Roolang	Beas	1.20	Mandi
34	Micro Hydroelectric Power Generation Pvt. Ltd.	New Road , Hanirpur (H.P)	Sorah	Sorah	Beas	1.50	Mandi
35	Micro Hydroelectric Power Generation Pvt. Ltd.	New Road , Hanirpur (H.P)	Swed	Bakhali	Beas	5.00	Mandi
36	Chainrkhand Hydro Imporint Projects	Kini Bhawan, North Ridge, SANJAULI,SHIMLA-171006	Chainrkhand	Machhad	Sutluj	1.50	Shimla
37	Ajay Energy & Power Corporation (P) Ltd	904 New Delhi House, Barakhamba Road, New Delhi-110001	Dogri	Dogri	Yamuna	2.50	Shimla

38	Chatarkhand Hydro Imperial Projects	Kieti Bhawan North Oak, SANJAUL,SHIMLA-171006	Murai	Seri-Mach	Satluj	0.50	Shimla
39	Rajpur Hydro Power (P) Ltd.	Building No-2/RH-1, Visava Enclave D.P. Road, Gandhi, Pune-411007	Rajpur	Nogli	Satluj	4.50	Shimla
40	Sturdy Industries Ltd.	Sector-I, Parwanoo-173220. Distt. Solan.(H.P.)	Salanti	Salanti	Yamuna	1.50	Shimla
41	Rampur Hydro Power Limited	B-23, Phase-II, Focal Point, Ludhiana (Punjab)	Sechi-II	Sechi	Satluj	1.00	Shimla
42	Gyathuni Renewable Power (P) Ltd.	Siddique House, Mandli Village, Mandli P.O., Chirgaon Tehsil, Distt. Shimla.	Shatul	Shatul	Yamuna	5.00	Shimla
43	Sai Engineering Foundation	Sai Bhawan Sector-4, New Shimla-171009.	Shimla	Shimla	Yamuna	5.00	Shimla
44	Himgiri Jal Vidyut Pvt. Ltd.	E-9/10 Vasant Vihar New Delhi-110057	Nera	Nera	Yamuna	1.60	Sirmour
45	Manglam Energy Development Co. Pvt. Ltd.	605, Ansal Bhavan,16, Kasturba Gandhi Marg New Delhi-110001.	Pallar-II	Pallar	Yamuna	4.50	Sirmour
46.	Pozal Power Pvt. Ltd.	Pozal Power Pvt. Ltd., Kullu	Pozal	Pozal	Beas	9.00	Kullu
47	KU Hydro Power Pvt. Ltd.	KU Hydro Power Pvt. Ltd., Kangra	Lambadug	Lambadug	Beas	25.00	Kangra
48	Trident Power Power Systems Ltd.	Trident Power Power Systems Ltd., Mandi	Lower Uhl	Lower Uhl	Beas	10.00	Mandi
49	DLI Power Pvt Ltd.	DLI Power Pvt. Ltd., Kinnaur	Raura	Raura	Satluj	8.00	Kinnaur
50.	Kanchanjunga Hydro Power Ltd.	Kanchanjunga Hydro Power Ltd., Baragaon, Kullu	Baragaon	Baragaon	Beas	24.00	Kullu
						219.65	

List of project likely to be commissioned during the year 2014-15.

Sr.No	Firm_Name	Address	Project_Name	Stream	Basin	Cap_MW	Distt.
1	Bashi Hydro Electric Power Projects Ltd.	214, Empire House (Basement) Dr. D. N. Road (Ext.) A. K. Nayak Marg Fort Mumbai-400001	Baleni Ka Nallah	Baleni Ka Nallah	Ravi	2.00	Chamba
2	Almi Hydro Electric Project Ltd.	214, Empire House (Basement) Dr. D. N. Road (Ext.) A. K. Nayak Marg Fort Mumbai-400001	Balij Ka Nallah-III	Balij Ka Nallah	Ravi	3.00	Chamba
3	Himson Power (P) Ltd.	3rd Floor, Sumana House, Opp. Shalimar Hotel Kempe corner, Mumbai - 400036	Bhararu	Kamil	Ravi	2.00	Chamba
4	Chenab Valley Fruit Veg. & Flower Marketking Dev. Co-Op Society	Banjaraloo, Tehsil, Chenab Distt. Chamba	Chainl Tepa	Chenil	Ravi	5.00	Chamba
5	B.K.Shirti Engineers Power Projects Pvt. Ltd.	Opp. Cheema Filling Station,Dhakki Road Pathankot (Punjab)	Chakka	Chakki	Beas	1.50	Chamba
6	Sumitra Power Promoters Pvt. Ltd.	17-B, Vasant Vihar,Talab Tillo,Jammu (J&K)-180002	Dhugli	Dehar	Beas	1.50	Chamba
7	Global Corporation Ltd.	C/o. Tricolor Powers (P) Ltd., Near Fisheries Breeding Farm, Post office Sultanpur, Chamba 176310	Durghed	Durghed	Ravi	1.10	Chamba
8	Hul Hydro Power Pvt. Ltd.	House No. 3-5-1303/102,First Floor, Behind Venkateshwara Motors, Hero Honda Show Room, Narayanaguda, Hyderabad-500029(A.P)	Hul	Hul	Ravi	4.50	Chamba
9	Upper Bari Power Generation (P) Ltd.	8th Floor, Express Trade Towers, 15-16, Sector 16-A, NOIDA (U.P.)-201301	Joiner	Joiner	Ravi	3.00	Chamba
10	Joiner Hydro Power Projects Pvt. Ltd.	214, Empire House (Basement) Dr. D. N. Road (Ext.) A.-K. Nayak Marg Fort Mumbai-400001	Joiner-II	Joiner	Ravi	3.00	Chamba
11	V.B. Hydro Projects Pvt.	315-316 Sahil Plaza, Dalhousie Road, Pathankot-145001 PB.	Kuwarsi	Kuwarsi	Ravi	5.00	Chamba
12	Shree Hydro Power Pvt. Ltd.	193-A/S Sainik Colony, Jammu (J&K)- 180011.	Samwara	Samwara	Ravi	2.50	Chamba
13	Jagdambay Hydro Projects	Amb Road, Una H.P	Kuwarsi II	Kuwarsi	Ravi	5.00	Chamba
14	Jawala Ji Power Projects	Hydro Complex, Lane Opp. Embassy Hotel, Dhangu Road, Pathankot.(Hotel Abhi International, Patel Chowk Pathankot)	Baganga	Ganga	Beas	5.00	Kangra

15	Binwa Power Co. Pvt. Ltd.	C/O Subhash Projects & Marketing Ltd. Subhash House 27/2 Okhela Industrial Area Phase-II New Delhi-110020	Binwa-II	Binwa	Beas	4.50	Kangra
16	Bhavani Renewable Energy Private Limited	Sungal Tea Estate, VPO Sungla, Tehsil Palampur, District Kangra (H.P.)-176061	Binwa-IV	Binwa	Beas	3.00	Kangra
17	JAYA Enterprises	Shilpna Villa Near Ritz Shimla-171001.	Leond	Leond	Beas	2.00	Kangra
18	Ascent Hydro Projects Ltd.	Building No.-2/RH-1, Vitava Enclave D.P.Road Aundh Pune-411007.	Melan	Melan	Satluj	4.50	Kinnaur
19	DLI Power (India) Pvt. Ltd.	Building No-2/RH-1, Vitava Enclave D.P. Road, Oundh, Pune-411007	Sallan	Sallan	Satluj	1.50	Kinnaur
20	Solding Hydropower (P) Ltd.	16, Hare Street, Kolkata-700001	Soldan	Soldan	Satluj	5.00	Kinnaur
21	ABB Power (P) Ltd.	103, Delhi Blue Apartments, 2, Factory Road, Safdarjung Ring Road, New Delhi-110029	Anni-II	Ani	Satluj	1.50	Kullu
22	ABB Power (P) Ltd.	103, Delhi Blue Apartments, 2, Factory Road, Safdarjung Ring Road, New Delhi-110029	Anni-III	Ani	Satluj	1.50	Kullu
23	Satluj Construction Ltd.	SCO-85B, 2nd Floor, NAC, Manimajra, Chandigarh-160101.	Keara	Forzal	Beas	4.50	Kullu
24	Rishi Bhrigu Enterprises Hydro Electric Power Projects (P) Ltd.	VPO Neoli, District Kullu (H.P.)-175103	Kukri	Forzal	Beas	5.00	Kullu
25	Haripur Power Company	Rajani Building, Near Naggar Castle, Distt. Kullu-175130 (H.P.)	Pakhroj	Pakhroj	Beas	2.50	Kullu
26	Woobways (I) Ltd.	217-A Industrial Area, Ludhiana-141003.	Sarbari	Sarwari	Beas	4.80	Kullu
27	K.K.K. Hydro Power Ltd.	1-41, DLF Industrial Area, Phase- I, Faridabad-121003	Shirli	Shirir	Beas	1.00	Kullu
28	Shree Nalna Hydro Power Pvt. Ltd.	Village Kathe P.O. Baddi Tehsil Nalagarh, Distt. Solan	Upper Sutrez	Sutrez-Se	Satluj	2.00	Kullu
29	Himalaya Vidyut Rural Electric Cooperative Society Ltd.	Mori Nirma Dhaskalini P.O.Rohru Distt. Shimla (H.P.)-171207	Jabal	Jabal	Yamun	2.00	Shimla
30	Vishal Exports Overseas Ltd.	Vishal House, Opp. Sales India, Behind Oriental Bank of Commerce, Ashram Road, Ahmadabad-380009	Jakhl	Jakhl	Yamun	1.50	Shimla
31	Yadlapati Agro products (P) Ltd.	201 Saundarya Apartments, Rajendra Nagar 1st Lane, Guntur (A.P.) 522006	Kot	Kot	Satluj	5.00	Shimla

32	Rosswin Pharmaceuticals (P) Ltd.	C-2406, Shreeji Heights, Sector 45-A, Palm Beach Road, Nerul, Navi Mumbai-400706	Teja	Teja	Yamun	3.00	Shimla
33	BLA Shalvi Hydro Power (P) Ltd.	Block C-5, 2nd Floor, SAI Engineering Hub, Mehli, Shimla (H.P.)-171009	Shalvi	Shalvi	Yamun a	4.75	Shimla
34	National Engineers & Contractors	2/114 Sadar Bazar, Delhi Cantt, New Delhi-110010	Todda	Mastrat Khi	Yamun	3.50	Shimla
35	Manli Power Pvt. Ltd	3rd Floor, Surya Plaza, K-135/1-Sarai Julena, New Friends Colony,New Delhi.110025	Upper Mang	Mangla	Satluj	5.00	Shimla
36.	Tangno Romai Power Generation Pvt. Ltd.	Tangno Romai Power Generation Pvt. Ltd., Shimla.	Tangno Romai-II	Tangno Romai-II	Yamu na	6.00	Shimla
37	Nauti Hydro Power Pvt. Ltd.	Nauti Hydro Power Pvt. Ltd., Shimla.	Upper Nauti	Upper Nauti	Satluj	12.00	Shimla.
38	Tranda Hydro Power Ltd.	Tranda Hydro Power Ltd., Kinnaur	Rala	Rala	Satluj	9.00	Kinnaur
39.	Gandhari Hydro Power Pvt.Ltd.	Gandhari Hydro Power Pvt. Ltd., Shimla.	Jongind	Jongind	Satluj	12.00	Shimla
40.	Surya Kantha Hydro Energies Pvt. Ltd.	Surya Kantha Hydro Energies Pvt. Ltd., Shimla.	Nauti	Nauti	Satluj	10.00	Shimla.
						165.15	

List of project likely to be commissioned during the year 2015-16.

Sr.No	Firm_ Name	Address	Project_ Name	Stream	Basin	Cap_ MW	Distt.
1	Vijay Singh Thakur	Old Telecom Building, Gangtoli Rohru, Distt. Shimla	Aali Dodrak	Heli	Yamuna	2.00	Shimla
2	Sanjay Shastri & Sky Gates Real Estate Pvt. Ltd.	House No. 669, Sector 11-B, Chandigarh	Ajog	Ajog	Chenab	5.00	Chamba
3	Sabco Finanz Pvt. Ltd	93, H.475 Srishta Kunj Pitampura Delhi:-110034.	Alwas	Sach	Ravi	2.60	Chamba
4	Kamlesh Thakur	F-2, Straw berry Shimla,Distt. Shimla HP	Anuup	Annat	Satluj	2.25	Mandi
5	Mandav Air Industries	Plot No. 12,Industrial Area-1, Sandikhad Mandi:- 175001	Baggi	Baggi	Beas	1.00	Mandi
6	Kurpan Valley Hydro Power Projects	Vill. Bagipul PO. Dutni Tehsil Nirmand Distt. Kullu (H.P.) via Rampur	Bagipul	Sarahan-K	Satluj	1.00	Kullu
7	JAYA Enterprises	Scipton Villa Near Ritz Shimla-171001	Banu	Banu	Beas	5.00	Kangra
8	Bhagsheswari Hydro Power Projects Pvt Ltd.	Supper Lodge Sanjauli Shimla	Baras	Bashari	Yamuna	1.50	Shimla
9	Prensha Hydro	584, Dari Road, Dharamshalla, Kangra	Dhawanda	Bhawanda	Beas	1.50	Kangra
10	Padma Hydel Projects Pvt. Ltd	Sidhaspur, MSA, Kangra	Brahal Top	Brahal	Beas	1.00	Kangra
11	Prashanti Hydro Energies Pvt. Ltd.	Sai Sankalp, Near PNB Baghar Road, Pabchnukhi, Tehsil Palampur Distt. Kangra	Brahal-V	Brahal	Beas	1.00	Kangra
12	Sandhya Hydro Power Project	Hotel Sandhya Palace Sarensini, Kullu Distt. Kullu	Chakshu-II	Chakshu	Beas	1.00	Kullu
13.	Satluj Constructions Ltd.	SCO-858, 2nd Floor, HAC, Manimajara, Chandigarh-160051	Charna	Palni	Yamuna	1.00	Sirmour
14	Swangi Hydro Power (P) Ltd.	Mrinalkini Estate, Deonghat, Sapron, Solan (H.P.)-173213	Chhoma	Chatri	Satluj	1.70	Mandi
15	Snow Valley Hydro Power (Partnership Firm)	Vill. Magla PO, Hardapura, Chamba Distt Chamba	Chobia-5	Sai Kao-Chobia	Ravi	5.00	Chamba
16	Chatri Hydro Power (P) Ltd.	Lanco House-141, Avenue-8, Road No. 3, Banjara Hills Hyd.	Choned-I	Choned	Ravi	5.00	Chamba
17	Kanji Power Pvt. Ltd	Dehra Road, Village Manpura Tehsil Nalagarh, Distt. Solan, H.P.	Daredi	Daredi-Bhour	Ravi	1.20	Chamba
18	Surender Singh Thakur	Vill. Chamrat PO Nalsolta Tehsil Dehra,Distt Kangra HP.	Dhamla	Bajetha	Yamuna	1.20	Sirmour
19	Apna Hydro Electric Projects	Durga Niwas , Below Himfed Building DCS, New Shimla-171009	Dhungan	Dhungan	Beas	1.00	Kullu
20	JIC Hydro Projects	Bhati Khad, Lodhikhu, Nurpur, Distt. Kangra	Dug	Dug Nallah	Ravi	5.00	Chamba

21	Harinder Thakur	Sole Pro. Gujjnol Stop, VPO Nagar Distt. Kullu	Gajnol	Chaki	Beas	1.00	Kullu
22	Techman Infra Ltd.	G-1356, L.G.F., Chittranjan Park, New Delhi 110019	Gaso	Bellsia	Ravi	5.00	Chamba
23	Techman Infra Ltd	G-1154, L.G.F., Chittranjan Park, New Delhi 110019	Gharwan	Gharwan-Malin	Ravi	5.00	Chamba
24	Chamba Hydro	P.O. Tehsil Dalhousie, Distt Chamba HP	Ghator Top	Ghator	Ravi	2.00	Chamba
25	Smec Hydro Power Pvt. Ltd.	193-A/5 Sainik Colony, Jammu (J &K) 180013.	Ghatur-I	Ghatur	Ravi	2.20	Chamba
26	Parai Hydro Power Project	Billoo Building, Vill Shana P.O. Nuti, Distt. Kullu:- 175131	Ghiaghi-II	Ghayagi	Beas	1.00	Kullu
27	Green Mountain Energy	503, Shakuntala Building, 59, Nehru Place, New Delhi;- 110019	Giri-III	Giri	Yamuna	3.00	Sirmour
28	Sai Sum Hydro Power (P) Ltd.	SAI Bhawan, Sector-IV, New Shimla-171009	Gohar-I	Jura	Beas	2.50	Mandi
29	Sai Sum Hydro Power (P) Ltd.	SAI Bhawan, Sector-IV, New Shimla-171009	Gohar-II	Jura	Beas	3.00	Mandi
30	Halindi Hydro Electric Project	Below HPMFED Building, ECS, New Shimla.	Halieda Nalla	Halindi	Beas	1.60	Kullu
31	First Hydro Generation (P) Ltd.	128/B/I, Kilikari, New Delhi-110014	Hul-B	Hul	Ravi	3.40	Chamba
32	Ashapuri Hydro Power Pvt. Ltd.	VPO Hurla Kullu	Hurla Top	Hurla-H	Beas	1.00	Kullu
33	Nanal Hydro Power Consultancy Pvt. Ltd.	Vardaan Cottage, Tuni Kandi Shimla- 171001	Hymat	Joiner	Ravi	3.00	Chamba
34	Technology House (I) Pvt. Ltd.	D-87, Sector-30, Noida (U.P.):- 201301	Jeori	Manglad	Satluj	5.00	Shimla
35	Jigrai Hydro Power (P) Ltd.	1st Floor, SIDHARTH, Bra road, Solan (H.P.)	Jigrai	Jigrai	Beas	4.00	Kullu
36	AV Forgings	Plot No. 230, Industrial Area-IX, SAS Nagar, Mohali, District Ropar (Punjab)- 160062	Jirah	Jirah	Beas	3.50	Kullu
37	Behl Motors	Plot No. 6 & 7, Industrial Area Phase-III Sauti Khad Mandi	Jiwa-II	Jiwa	Beas	1.00	Kullu
38	Techman Infra Ltd.	G-1356, L.G.F., Chittranjan Park, New Delhi:110019	Kachela	Mekkan	Ravi	5.00	Chamba
39	Bhilei Mata Hydro Electric Power Pvt. Ltd.	VPO Koti, Tehsil & Distt. Chamba	Kamil	Kamil	Ravi	2.00	Chamba
40	Chamunda Hydel Project Pvt. Ltd.	6/1 Mehal Sunehar, House No. 451, VPO Khaniari, Kangra	Kapri	Sanjoih	Beas	1.00	Kullu
41	Bhuga Enterprises Hydro Electric Power Developer	C/O Rupi Place Raghunathpur Kullu H.P	Kathi	Omeng	Beas	3.50	Kullu

42	Un Employed Engineers Labour and Construction Co-operative Society Ltd	VPO Bhuntar, Tehsil Kullu, Distt. Kullu	Khoksar	Sarwari	Beas	3.50	Kullu
43	Rajwalia Hydro Power Pvt. Ltd	Village Gondar, PO Lanowlia Distt. Kullu	Chatoo-Nin	Sainthi	Uhl	1.00	Kullu
44	Global Corporation Ltd	F-303, Lado Sarai New Delhi-30	Kul	Kul	Ravi	1.00	Chamba
45	River Hydro Projects	Village Manu PO Kuny, Chamba	Khar	Kimu	Ravi	1.00	Chamba
46	Sun Energy Resources, Pvt Ltd	13, Ward No 7, MC Area, Hamirpur, HP.	Kotagad	Naugad	Sutlej	2.00	Shimla
47	Mohindra Hydro Power Consultant Pvt Ltd.	C-13, Lane-1, Sector-1 New Shimla, 171009 H.P.	Kunhali	Kunhali	Ravi	1.00	Chamba
48	Saha Hydro Power (P) Ltd.	Pilot Blv. 181, E-2-293/B/WHB, Road No. 70, Jubilee Hill Hyderabad 500033 (A.P.)	Kurdha	Sunil-Kundi	Ravi	3.00	Chamba
49	Rajinder Kumar P.N	Near Nirmal Majlis House, Solan-171002	Kwar	Rajpur	Yamuna	4.00	Sirmaur
50	Jai Radha Nag Hydro Power Pvt Ltd.	11 Shanti, VPO Shanti Distt. Kullu	Upang Khc	Upang Khc	Beas	1.40	Kullu
51.	Greenko Budhil Energy Pvt Ltd.	Greenko Budhil Energy Pvt. Ltd., Shimla	Panchal Lalda	Panchal Lalda	Yamuna	24.00	Shimla
52	O P Steels Ltd	O P Steels Ltd., Chamba	Bali-II	Bali-II	Ravi	7.00	Chamba
53	Puri Oil Mills Ltd.	Puri Oil Mills Ltd., Mandi	Uhl	Uhl	Beas	9.00	Mandi
54.	Himani Energy Pvt. Ltd.	Himani Energy Pvt. Ltd., Kinnaur	Himani Chamunda Thingri	Himani Chamunda Thingri	Sutlej	9.50	Kinnaur
55.	Sangra Valley Hydro Power Ltd.	Sangra Valley Hydro Power Ltd., Kinnaur	Wangar Hornic	Wangar Hornic	Sutlej	24.00	Kinnaur
56.	Alwah Collonizers Pvt. Ltd	Yamuna Collonizers Pvt. Ltd., Kullu	Sarandi-II	Sarandi-II	Beas	9.00	Kullu
57	SSPV Projects Private Ltd Bangalore	SSPV Projects Private Ltd. Bangalore	Patrhan Bhang	Patrhan Bhang	Beas	9.00	Kullu
58.	Parwal Hydro Power Pvt Ltd	Parwal Hydro Power Pvt. Ltd., Chamba	Chonod	Chonod	Ravi	15.00	Chamba
59	Venture Energy Technology	Venture Energy Technology, Chamba	Sai Kothi	Sai Kothi	Ravi	15.00	Chamba
60.	Ramesh Hydro Power Pvt. Ltd	Rameshwar Hydro Power Pvt. Ltd., Kinnaur	Sehi Moraang	Sehi-Moraang	Sutlej	24.00	Kinnaur
61.	Chandigarh Distillers and Bottlers Ltd Chandigarh	Chandigarh Distillers and Bottlers Ltd Chandigarh	Rocra-II	Rocra-II	Sutlej	26.00	Kinnaur
62.	Shivalik Energy Pvt Ltd	Shivalik Energy Pvt Ltd., Chamba	Chachehand-II	Chachehand-II	Ravi	9.90	Chamba

367.45

2016-17

List of project likely to be commissioned during the year 2016-17

Sr.No	Firm_ Name	Address	Project_ Name	Stream	Basin	Cap_ MW	Distt.
1	Dadiji Engineering & Power Projects (P) Ltd.	Parkash Market, Dhariwal Bazar, Patiala (Punjab)-147005	Lower Chanju	Chanju	Ravi	4.00	Chamba
2	Himprabha Power Pvt. Ltd.	Village Karunguhi, P.O Pentelwa Tehsil Ghumarwin Distt. Bilaspur	Lower Kurpa	Kurpa	Satluj	4.00	Kullu
3	Sidh Motors Pvt. Ltd.	Jagiana, G.T. Road, Ludhiana-141420	Lower Makkan	Makkan	Ravi	5.00	Chamba
4	Jawla Hydro Power Pvt. Ltd.	PO Nagwain Tehsil Aut Distt. Mandi	Malana Top	Malana	Beas	5.00	Kullu
5	Mercury Solutions (P) Ltd.	10, Gurudwara Rakabganj Road, New Delhi 110001	Mallu	Malin	Ravi	3.00	Chamba
6	Mehndiratta Hydro Power (P) Ltd.	School Road, Behind Hotel Royal, Manali, District Kullu (H.P.) 175131	Manali Powe	Manalsu	Beas	1.00	Kullu
7	Techman Infra Ltd.	G-1334, L.G.F., Chittranjan Park, New Delhi:110019	Mangoli	Malin	Ravi	3.00	Chamba
8	Sabee Finam Pvt Ltd.	H.4/5 Suvidha Kunj Pitampura Delhi: 110034.	Mersa	Angrai	Ravi	5.00	Chamba
9	Irawat Ravin Valley Jalvidyut Sanchar Sabha Simiti	Jalvidyut Sanchar Sabha Simiti, Sarswati Nagar, Tehsil Jubbal, District Shimla	Mural	Salani	Yamuna	1.00	Shimla
10	Swamini Hydro Power (P) Ltd.	Mrinaleeni Estate, Deonghat, Saproon, Solan (H.P.)-173211	Nird	Swid	Satluj	3.00	Kullu
11	Manali Green Hydro Pvt. Ltd.	V/P.O Prini Kullu	Painali	Prini	Beas	0.50	Kullu
12	Bhuvaneshwari Enterprises	C/o Shishmati Resorts Bhuntar, Kullu H.P	Panche	Panche	Beas	1.50	Kullu
13	Ranital Hydro Venture	Village Ranital, Tehsil & Distt. Kangra	Parsi	Parsi	Beas	2.00	Kangra
14	Coherent Components (P) Ltd.	Vashist Bhawan, Vill Rabon, P.O Saproon,District Solan:-173211	Pharnri	Pharnri	Beas	1.00	Kullu
15	Techman Infra Ltd	G-1334, L.G.F., Chittranjan Park, New Delhi:110019	Purveda	Purveda	Ravi	1.50	Chamba
16	R.C Hydro Project	Bhari Khad PO Lodhwan, Tehsil, Nurpur, Distt. Kangra	Rack	Ghunda	Ravi	1.80	Chamba
17	Swamini Hydro Power (P) Ltd	Mrinaleeni Estate, Deonghat, Saproon, Solan (H.P.) 173211	Ram Bagh	Khudli	Satluj	2.00	Kullu
18	Jai Jawala Hydro Power Co	Gautam hardware Store, Garsa Near Parla Bhunter Distt. Kullu	Raskat-II	Raskat	Beas	0.40	Kullu
19	Irawat Ravin Valley Jalvidyut Sanchar Sabha Simiti	Saraswati Nagar, Tehsil Jubbal Shimla	Rawin	Rawin	Yamuna	1.00	Shimla
20	Hamdagni Enterprises	Sarwari Bazar Kullu	Sainj	Jwa	Beas	7.00	Kullu
21	Tuna Valley Hydro Power	Village Kuneti, Tehsil Kotkhai Distt. Shimla	Salanti-II	Salanti	Yamuna	1.00	Shimla

22	Swadeshi Thermotubes (P) Ltd.	18, Sector-18, Near Maruti Material Gate, Gurgaon-122015	Salun	Salun	Pavi	4.50	Chamba
23	Chamunda Hydel Project Pvt. Ltd.	6574 Motial Sunetar, House No. 453 VPO Kotshari, Distt. Kangra, H.P.	Sanjauli-I	Sanjoin	Dehi	1.00	Kullu
24	Bhrigu Power Pvt. Ltd.	Vasishta, Hingaj Baug, Manali Distt. Kullu	Surea	Shangha	Chenab	5.00	Lahaul & Spiti
25	Mountain Mover	Administrative Complex, Tarادevi, Shimla- 171010	Saru	Saru	Yamuna	1.50	Shimla
26	Dhensar Hydro Power Projects Pvt. Ltd.	House No.5, Dogra Estate Housing Board Jakhu Shimla	Saru	Saru	Yamuna	2.00	Shimla
27	Chamshwa Hydro Power	VPO Chopal District Shimla	Saru-I	Saru	Yamuna	3.00	Shimla
28	Surya Jyoti Devices (I) Pvt. Ltd	House No. E-7, Lajpat Nagar, New Delhi- 110024	Seri Ka Nala	Seri	Beas	3.00	Kangra
29	Kalima Hydro Power Private Limited	Village Shang P.O. Bhang Tehsil Manali Distt. Kullu	Shang	Halindi	Beas	1.00	Kullu
30	Shanshu Hydro Power Projects Co-Op Society	VPO Shanshu Keylong, Distt. Lahaul Spiti	Shanshu-I &	Shanshu	Chenab	4.00	Lahaul & Spiti
31	Lucky Power Projects Co.Operative Society Ltd.	C/o T.R. Verma Building, Sector-II, New Shimla (H.P.)-171009	STP-Baragad	STP-Lalpa	Yamuna	0.50	Shimla
32	A Chamunda II Power Projects	Hydro Complex, Lare Opp. Embassy Hotel, Dhangu Road, Pathankot. (Hotel Abhi International, Patel Chowk Pathankot)	Sunetar	Baner	Beas	3.00	Kangra
33	Bhoraar Hydro Power Projects Pvt. Ltd.	House No.5, Dogra Estate Housing Board Jakhu Shimla	Tele	Tela	Yamuna	2.00	Shimla
34	Himalya Energy	Behind LIC office Parmar House Near Bus Stand Bhuntar, Kullu (H.P.)	Thachang	Thachanin	Beas	1.00	Kullu
35	Jagadamba Hydro Projects	Amb Road, Una H.P.	Tocal-Kundli	Tocal-Kundli	Ravi	5.00	Chamba
36	Kaswang Hydro Power Pvt. Ltd.	Village halatu, PO Dundhar, Tehsil Chachyot Distt. Mandi	Tuna Dhar	Juni	Beas	1.00	Mandi
37	ABHM Power Project Pvt Ltd	Plot No 219, HPSIDC, Industrial Area, Baddi Distt Solan	UPI	Bachala	Beas	2.50	Mandi
38	Himson Power (P) Ltd.	3rd Floor, Suzana House, Opp. Shalimar Hotel Kempa corner, Mumbai- 400036	Upper Chanju	Chanju	Ravi	4.70	Chamba
39	Vimla Hydro Power (P) Ltd	Village Sunhan, Tehsil Rampur Bushahr, Distt. Shimla.	Upper Kuma	Nerti	Sutluj	5.00	Shimla
40	Trilok Chauhan	VPO Sheel, Tehsil, Rohru Distt. Shimla	Warida	Wecaya	Yamuna	2.00	Shimla

42	Bhasar India Tech Pvt. Ltd.	3rd Floor, Gold Tower No. 50, Residency Road, Bangalore-25	Anni-IV	Ani	Sutluj	4.00	Kullu
42	Shali Power Hydro Project	North Oak Building Sanjauli, Shimla-6	Anni-Hagi	Pandoa	Sutluj	2.00	Shimla
43	Karsog Valley Hydro Power Project	VPO Pangna Tesil Karsog Distt. Mandi.	Anu Dhalan	Anuop	Sutluj	1.25	Mandi
44	Sigma Hydel Projects Pvt. Ltd.	Ward No. 1, Hira Nagar, Hamirpur, H.P.	Badhal	Badhal	Sutluj	1.00	Shimla
45	Aadhya Hydro Power Projects	North Oak Building Sanjauli Shimla	Baghara	Baghara	Sutluj	0.80	Shimla
46	The Executive Engineer	S.M.I.P. Divyara, Jawali, Distt. Kangra	Bagrood	Shidaiha C	Beas	0.29	Kangra
47	Water Path Hydro Power Enterprises	Sal Kunj North Oak Sanjauli Shimla	Bagnad	Bajaru	Beas	1.00	Kullu
48	The President, The Rainbow Hydro Power Co-Op. Society Ltd.	Kasol, Distt. Kullu, H.P.	Bakar-Kiara	Bakar Kia	Beas	1.10	Kullu
49	Tesha-Na-Kor	Jogindernagar, Distt. Mandi-176102	Balij-Top	Balij Ka Nallah	Ravi	2.00	Chamba
50	PKS Hydro Power (P) Ltd.	Kalyani Complex, Akhara Bazar, Kullu.	Balsio Top	Chirari	Ravi	5.00	Chamba
51	Ajay Kumar Sood Engineers & Contractor	Sanjay Sadan Near Co-Op. Bank Chota Shimla-171002	Banad	Banar	Beas	1.50	Mandi
52	UESAL Hydro Power Project Pvt. Ltd.	Amar Guest House, House No. 272/13 Sadar Khad Mandi	Banar	Banar	Beas	1.00	Mandi
53	New Uhaulidhar Hydro Projects	Laxmi General Store Manali-1, Kangra	Baner	Baner	Beas	1.00	Kangra
54	Malabar Hydro Power Pvt. Ltd.	Opp. Airport Gate, Bhuntar, Kullu	Bar#2	Bar#2	Yamuna	1.00	Sirmour
55	Dev Maha Mai Hydro Project	Vill. Alugrand PO Kalath, Manali Kullu	Barod	Barod	Beas	1.00	Kullu
56	Shirgul Dev Hydro Power (P) Ltd.	B-7, Phase, Sector-I, New Shimla.	Bashari	Bashari	Yamuna	1.00	Shimla
57	Shirgul Dev Hydro Power (P) Ltd.	B-7, Phase, Sector-I, New Shimla	Bashari-I	Bashari	Yamuna	1.00	Shimla
58	Pramod Dogra	Village Kangaon P.O. Pujarli, Via Jubbal Distt. Shimla	Basru	Basru	Yamuna	4.80	Shimla
59	Showing India Power Project	Rathore House, BCS New Shimla	Binangna	Binjauna	Yamuna	1.48	Sirmour
60	Hurandi Nala Hydro Power Project Co. Op. Society Ltd	Vill. Shang P.O. Burua Tehsil Manali Distt. Kullu	Beas Kund T	Beas Kund	Beas	2.00	Kullu
61	Shakun Lok Hydro Power	VPO Larji Sub Tehsil Sainj Distt. Kullu	Dehali	Sainj	Beas	1.00	Kullu
62	Tarun Dutt	VPO Bahang, Tehsil Manali Distt. Kullu	Berang	Berang	Sutluj	1.50	Lahaul & Spiti

63.	Sai Hydel Power Ltd.	Sai Hydel Power Ltd., Mandi	Bharari	Bharari	Satluj	6.00	Mandi
64	Ugreshi Power Projects Pvt. Ltd.	Ugreshi Power Projects Pvt. Ltd., Kullu	Umli	Umli	Satluj	14.30	Kullu
65	Shirikhand Mahadev Hydro Power Pvt. Ltd.	Shirikhand Mahadev Hydro Power Pvt. Ltd., Kullu	Shirikhand	Shirikhand	Satluj	8.00	Kullu
66	Khamal Hydro-Electric Project Pvt. Ltd.	Khamal Hydro Electric Project Pvt. Ltd., Mandi	Ubl Khad	Ubl Khad	Beas	14.00	Mandi
67	Sai Urja Hydel Projects Ltd.	Sai Urja Hydel Projects Ltd., Kullu	Bhang	Bhang	Beas	9.00	Kullu

198.02
198.02

Jammu & Kashmir

(183)

SYSTEM AND OPERATION WING KASHMIR

J&K Power Development Department

PDD Complex Bemina Srinagar (PIN-190010), Phone: 0194-2491340 Fax: 0194-2494125 E-mail: dcwkashmir@rediffmail.com

The Executive Director (STF-Smart Grid)
Power Grid Corporation of India,
Gurgoan.

No: CE/SOK/T- 3310-42
Dated: 30-6-2012

Sub: Data for renewable energy resources & its transmission infrastructure.

Ref: Your email sent to Principal Secretary to Govt, J&K PDD.

Sir,

As desired, enclosed kindly find the aforesaid information consolidated for J&K State as received from various agencies involved with RES viz J&K Energy Development Agency(JAKEDA), J&K State Power Development Corporation, Kargil Renewable Energy Development Agency (KREDA) & Leh Renewable Energy Development Agency (LREDA).

Yours faithfully,

Enclosure: 10 (Ten) leaves.

Chief Engineer,

Copy to the:

1. Principal Secretary to Govt, J&KPDD, Srinagar for information.
2. Development Commissioner (P), J&K PDD, Srinagar for information.

Data for Renewable Energy Resources and its Transmission Infrastructure

Name of the State: Jammu & Kashmir

(A) **Existing RES**

(i) Total Installed Capacity (MW)

Type.	MW.
Wind	0.06
Solar PV	2.125
Solar Thermal	Nil
Small Hydro	117.96
Biomass/Waste to Energy	Nil

(ii) Availability.

Type.	Injection (MW)		Injection in Grid Peak/Off Peak hrs (MW)	
	Maximum	Minimum.	Peak	Off Peak.
Wind	0.06	--	Residential school in Leh	
Solar PV	0.80	0.99	No grid connectivity	
Solar Thermal	--	--	--	--
Small Hydro	85.47	35.00	RoR Schemes/ No Peaking	
Biomass/Waste to Energy	--	--		--

(i)D Network Connectivity.

S. No.	Developer	Installed Capacity (MW/KW)	Location (Vill/Dist)	Transmission Scheme (details like name of line (D/C or S/C), voltage level (kV), length, Conductor type etc.		Maximum Injection (MW)	Name of 220 kV STU S/s for above Injection	Tr. System beyond injection point.
				Immediate Evacuation	Associated Strengthening, if any			
	Solar PV							
1	Kargil/Zanskar	400 KW	Zanskar	220 Volt Direct Line		300 KW	local distribution under RGGVY	
2	Leh Renewable EDA (LREDA)	7.50	Hanglar	through RGGVY network (11 kV, AC, Weasel)		3.00	local distribution under RGGVY	
3	Leh Renewable EDA (LREDA)	7.50	Rumbak	through RGGVY network (11 kV, AC, Weasel)		3.00	local distribution under RGGVY	
4	Leh Renewable EDA (LREDA)	7.50	Dolkling	through RGGVY network (11 kV, AC, Weasel)		3.00	local distribution under RGGVY	
5	Leh Renewable EDA (LREDA)	7.50	Waris/ Tastan	through RGGVY network (11 kV, AC, Weasel)		3.00	local distribution under RGGVY	
6	Leh Renewable EDA (LREDA)	7.50	Khastath	through RGGVY network (11 kV, AC, Weasel)		3.00	local distribution under RGGVY	
7	Leh Renewable EDA (LREDA)	10.00	Relay	through RGGVY network (11 kV, AC, Weasel)		4.00	local distribution under RGGVY	
8	Leh Renewable EDA (LREDA)	12.50	Lukung	through RGGVY network (11 kV, AC, Weasel)		5.00	local distribution under RGGVY	
9	Leh Renewable EDA (LREDA)	12.50	Kaya	through RGGVY network (11 kV, AC, Weasel)		5.00	local distribution under RGGVY	
10	Leh Renewable EDA (LREDA)	15.00	Maan	through RGGVY network (11 kV, AC, Weasel)		6.00	local distribution under RGGVY	
11	Leh Renewable EDA (LREDA)	15.00	Ankung	through RGGVY network (11 kV, AC, Weasel)		6.00	local distribution under RGGVY	
12	Leh Renewable EDA (LREDA)	15.00	Chigra	through RGGVY network (11 kV, AC, Weasel)		6.00	local distribution under RGGVY	
13	Leh Renewable EDA (LREDA)	20.00	Parma	through RGGVY network (11 kV, AC, Weasel)		8.00	local distribution under RGGVY	
14	Leh Renewable EDA (LREDA)	20.00	Shayok	through RGGVY network (11 kV, AC, Weasel)		8.00	local distribution under RGGVY	
15	Leh Renewable EDA (LREDA)	20.00	Diplling	through RGGVY network (11 kV, AC, Weasel)		8.00	local distribution under RGGVY	
16	Leh Renewable EDA (LREDA)	20.00	Hunder Dok	through RGGVY network (11 kV, AC, Weasel)		8.00	local distribution under RGGVY	
17	Leh Renewable EDA (LREDA)	20.00	Demjok	through RGGVY network (11 kV, AC, Weasel)		8.00	local distribution under RGGVY	
18	Leh Renewable EDA (LREDA)	80.00	Lingshed	through RGGVY network (11 kV, AC, Weasel)		32.00	local distribution under RGGVY	
19	Leh Renewable EDA (LREDA)	20.00	Nidcar	through RGGVY network (11 kV, AC, Weasel)		8.00	local distribution under RGGVY	
20	Leh Renewable EDA (LREDA)	25.00	Kherapulu	through RGGVY network (11 kV, AC, Weasel)		10.00	local distribution under RGGVY	
21	Leh Renewable EDA (LREDA)	25.00	Skumpara	through RGGVY network (11 kV, AC, Weasel)		10.00	local distribution under RGGVY	
22	Leh Renewable EDA (LREDA)	25.00	Yuldung	through RGGVY network (11 kV, AC, Weasel)		10.00	local distribution under RGGVY	
23	Leh Renewable EDA (LREDA)	25.00	Nyarags	through RGGVY network (11 kV, AC, Weasel)		10.00	local distribution under RGGVY	

(2)

S. No.	Developer	Installed Capacity (MW/KW)	Location (Vill/Dist)	Transmission Scheme (details like name of line (D/C or S/C), voltage level (kV), length, Conductor type etc.		Maximum Injection (MW)	Name of 220 kV STU S/s for above injection	Tr. System beyond injection point.
				Immediate Evacuation	Associated Strengthening, if any			
24	Leh Renewable EDA (LREDA)	25.00	Markha	through RGGVY network (11 kV, AC, Weasel)		10.00	local distribution under RGGVY	
25	Leh Renewable EDA (LREDA)	25.00	Bokskado	through RGGVY network (11 kV, AC, Weasel)		10.00	local distribution under RGGVY	
26	Leh Renewable EDA (LREDA)	25.00	Yarath	through RGGVY network (11 kV, AC, Weasel)		10.00	local distribution under RGGVY	
27	Leh Renewable EDA (LREDA)	32.50	Nemgo	through RGGVY network (11 kV, AC, Weasel)		13.00	local distribution under RGGVY	
28	Leh Renewable EDA (LREDA)	32.50	Samad Rokchan	through RGGVY network (11 kV, AC, Weasel)		13.00	local distribution under RGGVY	
29	Leh Renewable EDA (LREDA)	37.50	Satho	through RGGVY network (11 kV, AC, Weasel)		15.00	local distribution under RGGVY	
30	Leh Renewable EDA (LREDA)	37.50	Photoksar	through RGGVY network (11 kV, AC, Weasel)		15.00	local distribution under RGGVY	
31	Leh Renewable EDA (LREDA)	40.00	Merak	through RGGVY network (11 kV, AC, Weasel)		16.00	local distribution under RGGVY	
32	Leh Renewable EDA (LREDA)	40.00	Largiab	through RGGVY network (11 kV, AC, Weasel)		16.00	local distribution under RGGVY	
33	Leh Renewable EDA (LREDA)	42.50	Yourgo	through RGGVY network (11 kV, AC, Weasel)		17.00	local distribution under RGGVY	
34	Leh Renewable EDA (LREDA)	85.00	Koyul	through RGGVY network (11 kV, AC, Weasel)		34.00	local distribution under RGGVY	
35	Leh Renewable EDA (LREDA)	85.00	Hanley Khaldo	through RGGVY network (11 kV, AC, Weasel)		34.00	local distribution under RGGVY	
36	Leh Renewable EDA (LREDA)	42.50	Pungog	through RGGVY network (11 kV, AC, Weasel)		17.00	local distribution under RGGVY	
37	Leh Renewable EDA (LREDA)	85.00	Hanley TR	through RGGVY network (11 kV, AC, Weasel)		34.00	local distribution under RGGVY	
38	Leh Renewable EDA (LREDA)	50.00	Deggar	through RGGVY network (11 kV, AC, Weasel)		20.00	local distribution under RGGVY	
39	Leh Renewable EDA (LREDA)	115.00	Chuchul	through RGGVY network (11 kV, AC, Weasel)		46.00	local distribution under RGGVY	
40	Leh Renewable EDA (LREDA)	57.50	Khamak	through RGGVY network (11 kV, AC, Weasel)		23.00	local distribution under RGGVY	
41	Leh Renewable EDA (LREDA)	155.00	Nyoma	through RGGVY network (11 kV, AC, Weasel)		62.00	local distribution under RGGVY	
42	Leh Renewable EDA (LREDA)	65.00	Mudth	through RGGVY network (11 kV, AC, Weasel)		26.00	local distribution under RGGVY	
43	Leh Renewable EDA (LREDA)	100.00	Korzok	through RGGVY network (11 kV, AC, Weasel)		40.00	local distribution under RGGVY	
44	MNRE/LeDEG	100.00	Tangste	through RGGVY network (11 kV, AC, Weasel)		40.00	local distribution under RGGVY	
45	IREDA	15.00	Shayok	through RGGVY network (11 kV, AC, Weasel)		6.00	local distribution under RGGVY	
46	IREDA	15.00	Mean	through RGGVY network (11 kV, AC, Weasel)		6.00	local distribution under RGGVY	
	Total	2125.0 KW				990.0 KW		

(3)

S. No.	Developer	Installed Capacity (MW/KW)	Location (Vill/Dist)	Transmission Scheme (details like name of line (D/C or S/C), voltage level (kV), length, Conductor type etc.		Maximum Injection (MW)	Name of 220 kV STU S/s for above Injection	To System beyond injection point.
				Immediate Evacuation	Associated Strengthening, if any			
	Small Hydro							
1	JKSPDC (USHP-I Sumbal)	22.60	Ganderbal	132 kV S/C USHP-I/Panther		16.95	220 kV Pampore.	132 kV
2	JKSPDC (Ganderbal)	15.00	Ganderbal	33 kV S/C Habak Line/Dog		11.25	220 kV Pampore.	132 kV
3	JKSPDC (Pulgam).	3.00	Anantnag	11 kV Power House/.1 ACSR Dog		2.25	220 kV: Mirbazar.	33 kV
4	JKSPDC (Karnah)	2.00	Kupwara	11 kV in Isolation/Rabbit		1.50	--	--
5	JKSPDC (Chenani - I)	23.30	Udhampur	132 kV Beamer: Udhampur/Panther.		17.48	220 kV Udhampur	220 kV
6	JKSPDC (Chenani - II)	2.00	Udhampur	6.6 kV to Chenani-I/Rabbit		1.50	220 kV Udhampur	132 kV
7	JKSPDC (Chenani-III)	7.50	Udhampur	33 kV Udhampur Grid/Dog		5.63	220 kV: Udhampur	132 kV
8	JKSPDC (Bhaderwah)	1.50	Bhaderwah	11 kV Bhaderwah Rec/Station/Rabbit		1.13	220 kV Udhampur	132 kV
9	JKSPDC (Iqbal)	3.75	Kargil	11 kV Kargil Rec/Stn Rabbit		2.81	--	--
10	JKSPDC (Sumoor)	0.10	Leh	11 kV in Isolation/Weasel		0.08	.	
11	JKSPDC (Hunder)	0.40	Leh.	11 kV in Isolation/Weasel		0.30	--	--
12	JKSPDC (Bazgo)	0.30	Leh.	11 kV in Isolation/Weasel		0.23	--	--
13	JKSPDC (Igo-Mercellong)	3.00	Leh.	22 kV/Dog		2.25	--	--
14	JKSPDC (Marpachoo)	0.75	Kargil	11 kV in Isolation/Weasel		0.56	--	--

(4)

S. No.	Developer	Installed Capacity (MW/KW)	Location (Vill/Dist)	Transmission Scheme (details like name of line (D/C or S/C), voltage level (kV), length, Conductor type etc.		Maximum Injection (MW)	Name of 220 kV STU S/s for above Injection	Tr. System beyond injection point.
				Immediate Evacuation	Associated Strengthening, if any			
15	JKSPDC (Hafial)	1.00	Kargil	11 kV in Isolation/Wensel		0.75	--	--
16	JKSPDC (Saliakna)	4.00	Leh.	22 kV/Dog		3.00	--	--
17	JKSPDC (Sewa-III)	9.00	Basohli	33 kV Bhoond Rec. Station/Dog		6.75		
18	JKSPDC (Sanzak)	1.26	Kargil	11 kV in Isolation/Wensel		0.95	--	--
19	Muggapie Hydel Constn. Operation Industries (Athwathoo)	10.00	Budgam.	33 kV Badampora-HCC Line/Wolf		7.50	220 kV Alusteng	132 kV
20	F&R Engineering Works (Brenwar).	7.50	Budgam.	33 kV Budgam-Brenwar Line/Dog		5.63	220 kV Budgam.	132 kV
	Total	117.86 MW			Total	88.50 MW		

(5)

Name of the State: Jammu & Kashmir

(ii) Future potential location & Capacity.

Type	MW
Wind	18.20
Solar PV	101.345
Solar Thermal	1.00
Small Hydro	361.80
Biomass/Waste to Energy	Nil

(iii) RES capacity addition programme in 12th Plan.

Type	2012-13	2013-14	2014-15	2015-16	2016-17
Wind	--	4.10	4.10	2.00	2.00
Solar PV	1.345	--	100.00	--	--
Solar Thermal	--	--	1.00	--	--
Small Hydro	26.50	35.95	39.00	108.00	152.35
Biomass/Waste to Energy	--	--	--	--	-

(iii) Network Connectivity.

S. No.	Developer	Installed Capacity (MW)	Location (Vill/Dist)	Transmission Scheme (details like name of line (D/C or S/C), voltage level (kV), length, Conductor type etc.		Max Injection (MW)	Name of 220 kV SEB S/s for above Injection	Tr. System beyond injection point.
				Immediate Evacuation	Associated Strengthening, if any			
	Wind							
1	JAKEDA.	12	Bddi, Rena.	33/11 kV Rec. Station Bddi.	--	10.8	220 kV Udhampur	132 kV
2	Ich Renewable EDA	0.2	Zeh	To be connected to 33 kV network		0.2		--
	Solar PV							
1	Kargil	1.345	Kargil	220 Volt direct line.		1.345	--	--
	Small Hydro							
1	JKSPDC (Marchal)	0.35	Sopwara	11 kV in Isolation		0.35	--	--
2	JKSPDC (Palalgam)	1.50	Anantnag	11 kV Power House/feeder		1.50	220 kV Mirbazar	33 kV
3	Chenab-V Power Project	15.00	Doda	Nearest 33 kV network.		15.00	220 kV Udhampur	132 kV
4	Magpie Hydel Coast.	10.00	Baramulla	Nearest 33 kV network.		10.00	220 kV Delina	132 kV
5	Construction Engineers (Hirpor)	12.00	Shopian	Nearest 33 kV network.		12.00	220 kV Pampore.	132 kV
6	Rehbar Engineering Works,	4.00	Kupwara	Nearest 33 kV network		4.00	220 kV Delina	132 kV
7	VKB Industrial Estate (Budnivar)	12.00	Baramulla	Nearest 33 kV network		12.00	220 kV Delina	132 kV

(6)

S. No.	Developer	Installed Capacity (MW)	Location (Vill/Dist)	Transmission Scheme (details like name of line HVC or EVC), voltage level (kV), length, Conductor type etc		Max Injection (MW)	Name of 220 kV SEU S/s for above Injection	Tr. System beyond injection point.
				Intended Evacuation.	Associated Strengthening, if any			
8	Mangwa Hydel Consil.	15.00	Poonch	Nearest 33 kV network.		15.00	220 kV Bari	132 kV
9	Gamo Leasing Ltd. Jammu (Drogi	5.00	Kathua	Nearest 33 kV network.		5.00	220 kV Hiranagar	132 kV
10	JKSPDC (Dhagwar)	6.00	Kishtwar	Nearest 33 kV network		6.00	220 kV Udhampur	132 kV
11	JKSPDC (Bhaza) Bunjwah)	21.00	Kishtwar	Nearest 132 kV network.		21.00	220 kV Udhampur	132 kV
12	JKSPDC (Gulabgarh)	6.50	Reasi	Nearest 33 kV network		6.50	220 kV Udhampur	132 kV
13	JKSPDC (Shalgla)	16.00	Poonch	Nearest 132/33 kV network		16.00	220 kV Bari	132 kV
14	JKSPDC (Nihama)	6.00	Kulgam	Nearest 33 kV network.		6.00	220 kV Mirbazar	132 kV
15	JKSPDC (Bringi)	4.00	Anantnag	Nearest 33 kV network.		4.00	220 kV Mirbazar	132 kV
16	JKSPDC (Shalganga)	4.50	Budgam.	Nearest 33 kV network.		4.50	220 kV Budgam	132 kV
17	JKSPDC (Girjan Ki Gali)	12.00	Poonch	Nearest 33 kV network		12.00	220 kV Bari	132 kV
18	JKSPDC (Sewa II)	8.00	Kathua	Nearest 33 kV network.		8.00	220 kV Hiranagar	132 kV
19	JKSPDC (Chenkowari)	7.00	Baramulla	Nearest 33 kV network		7.00	220 kV Delina	132 kV
20	JKSPDC (Zaina)	10.00	Rajouri	Nearest 33 kV network.		10.00	220 kV Akhnoor	132 kV
21	JKSPDC (Marwar)	10.00	Kupwara	Nearest 33 kV network		10.00	220 kV Delina	132 kV
22	JKSPDC (Doniyar)	6.00	Baramulla	Nearest 33 kV network.		6.00	220 kV Delina	132 kV
23	JKSPDC (Cherzai - IV)	7.00	Udhampur	Nearest 33 kV network.		7.00	220 kV Udhampur	132 kV
24	Paniton SHP	2.00	Ramban	Nearest 33 kV network.		2.00	220 kV Ramban	132 kV
25	Pogal SHP	2.00	Ramban	Nearest 33 kV network.		2.00	220 kV Ramban	132 kV
26	Uldical SHP.	1.75	Ramban	Nearest 33 kV network.		1.75	220 kV Ramban	132 kV
27	Lanka Kirdeta SHP	1.60	Ramban	Nearest 33 kV network.		1.60	220 kV Ramban	132 kV
28	Shari SHP.	1.50	Ramban	Nearest 33 kV network.		1.50	220 kV Ramban	132 kV
29	Tangae Pandoli	1.00	Kulgam	Nearest 33 kV network.		1.00	220 kV Mirbazar	132 kV
30	Pahalnar, Kangan	1.40	Ganderbal	Nearest 33 kV network.		1.40	220 kV Akhnoor	132 kV
31	Balnkulan, Kangan	1.60	Ganderbal	Nearest 33 kV network.		1.60	220 kV Akhnoor	132 kV
32	Soraya Mill	1.20	Budgam	Nearest 33 kV network.		1.20	220 kV Budgam	132 kV
33	Arizal	1.20	Budgam.	Nearest 33 kV network.		1.20	220 kV Budgam	132 kV
34	Sheri	1.20	Baramulla	Nearest 33 kV network.		1.20	220 kV Delina	132 kV
35	Dokoro-Qondipora	1.60	Anantnag	Nearest 33 kV network.		1.60	220 kV Mirbazar	132 kV
36	Gagadar	0.60	Budgam	Nearest 33 kV network.		0.60	220 kV Budgam	132 kV

(7)

S. No.	Developer	Installed Capacity (MW)	Location (V.L/Dist)	Transmission Scheme details like name of Line (D/C or S/C), voltage level (kV), length, Conductor type etc.		Max Injection (MW)	Name of 220 kV STU S/s for power Injection	Tr. System beyond injection point.
				Immediate Location	Associated Strengthening, if any			
37	Sonusal	0.80	Doda	Nearest 33 kV network.		0.80	220 kV Bhaderwah	132 kV
38	Kandey Nallah	0.80	Kulgam	Nearest 33 kV network.		0.80	220 kV Mirbazar	132 kV
39	Bonkidan Kangan	1.75	Ganderbal	Nearest 33 kV network.		1.75	220 kV Alusteng	132 kV
40	Rasil, Kangan	1.15	Ganderbal	Nearest 33 kV network.		1.15	220 kV Alusteng	132 kV
41	Sirfaraze, Kangan	1.10	Ganderbal	Nearest 33 kV network.		1.10	220 kV Alusteng	132 kV
42	Wariyaran, Kangan	0.55	Ganderbal	Nearest 33 kV network.		0.55	220 kV Alusteng	132 kV
	Total	224.65						
	Small Hydro Sites Identified & DPR's Yet to be Prepared.							
1	Kotli Walli Micro Hydel Scheme.	0.30	Rajouri.	Nearest 33 kV or 11 kV network		0.30	220 kV Bari	132 or 33 kV
2	Ghat 2nd,	0.80	Kishtwar	Nearest 33 kV or 11 kV network		0.80	220 kV Udhampur	132 or 33 kV
3	Jari Micro HP, Padli-I	0.80	Rajouri.	Nearest 33 kV or 11 kV network.		0.80	220 kV Bari	132 or 33 kV
4	Kel-I Micro HS	0.07	Reasi	Nearest 33 kV or 11 kV network.		0.07	220 kV Udhampur	132 or 33 kV
5	Bagar 1st	0.70	Doda	Nearest 33 kV or 11 kV network.		0.70	220 kV Udhampur	132 or 33 kV
6	Kishtwar Micro HS.	2.00	Kishtwar	Nearest 33 kV or 11 kV network.		2.00	220 kV Udhampur	132 or 33 kV
7	Doda Micro HS - 1st.	1.75	Doda	Nearest 33 kV or 11 kV network.		1.75	220 kV Udhampur	132 or 33 kV
8	Bhali Micro HS	1.50	Doda	Nearest 33 kV or 11 kV network.		1.50	220 kV Udhampur	132 or 33 kV
9	Nagriyan Mini HS	2.00	Poonch	Nearest 33 kV or 11 kV network.		2.00	220 kV Bari	132 or 33 kV
10	Dessa - 2nd Micro HS.	1.20	Doda	Nearest 33 kV or 11 kV network.		1.20	220 kV Udhampur	132 or 33 kV
11	Micro Hydro Scheme - 2nd.	1.50	Doda	Nearest 33 kV or 11 kV network.		1.50	220 kV Udhampur	132 or 33 kV
12	Gotu Micro Hydro Scheme.	1.00	Doda	Nearest 33 kV or 11 kV network.		1.00	220 kV Udhampur	132 or 33 kV
13	Sohal Micro Hydro Scheme.	1.75	Doda	Nearest 33 kV or 11 kV network.		1.75	220 kV Udhampur	132 or 33 kV
14	Jagla - 2nd.	1.40	Doda	Nearest 33 kV or 11 kV network.		1.40	220 kV Udhampur	132 or 33 kV
15	Dessa - 1st.	1.75	Doda	Nearest 33 kV or 11 kV network.		1.75	220 kV Udhampur	132 or 33 kV
16	Gangal Gowari.	1.50	Doda	Nearest 33 kV or 11 kV network.		1.50	220 kV Udhampur	132 or 33 kV
17	Gagriyan HS.	2.00	Poonch	Nearest 33 kV or 11 kV network.		2.00	220 kV Bari	132 or 33 kV
18	Sri Gwari Keshwan Micro HS.	2.00	Kishtwar	Nearest 33 kV or 11 kV network.		2.00	220 kV Udhampur	132 or 33 kV
19	Dessekire-Chatroo Micro HS.	1.75	Kishtwar	Nearest 33 kV or 11 kV network.		1.75	220 kV Udhampur	132 or 33 kV

(8)

S No.	Developer	Installed Capacity (MW)	Location (Vill/Dist)	Transmission Scheme Details like name of Line (D/C or S/C), voltage level (kV), length, Conductor type etc.		Max Injection (MW)	Name of 220 kV STU S/s for above Injection	Tr. System beyond injection point.
				Immediate Evacuation	Associated Strengthening, if any			
20	Gulshan Pomposh.	1.00	Anantnag	Nearest 33 kV or 11 kV network.		1.00	220 kV Mirbazar	132 or 33 kV
21	Narpan .	0.78	Shopian	Nearest 33 kV or 11 kV network.		0.78	220 kV Tangpore.	132 or 33 kV
22	Gund Kangan.	0.76	Ganderbal	Nearest 33 kV or 11 kV network.		0.76	220 kV Alusteng'	132 or 33 kV
23	Gandhol Anthal .	1.00	Anantnag	Nearest 33 kV or 11 kV network.		1.00	220 kV Mirbazar	132 or 33 kV
24	Sandran Kapran.	2.00	Anantnag	Nearest 33 kV or 11 kV network.		2.00	220 kV Mirbazar	132 or 33 kV
25	Gamran Pannoh .	1.00	Anantnag	Nearest 33 kV or 11 kV network.		1.00	220 kV Mirbazar	132 or 33 kV
26	Hannan Markol, Rafiabad	1.00	Baramulla	Nearest 33 kV or 11 kV network.		1.00	220 kV Delina	132 or 33 kV
27	Bugkulan Kangan.	1.20	Ganderbal	Nearest 33 kV or 11 kV network.		1.20	220 kV Alusteng'	132 or 33 kV
28	Baglore. Gurez.	0.10	Bandipora	Nearest 33 kV or 11 kV network.		0.01	220 kV Alusteng'	132 or 33 kV
29	Wanigam Kangan.	1.07	Ganderbal	Nearest 33 kV or 11 kV network.		1.07	220 kV Alusteng'	132 or 33 kV
30	Badogam Gurez	0.92	Bandipora	Nearest 33 kV or 11 kV network.		0.92	220 kV Alusteng'	132 or 33 kV
31	Deasa Khandipora.	2.00	Anantnag	Nearest 33 kV or 11 kV network.		2.00	220 kV Mirbazar	132 or 33 kV
32	Deatew Kulgam.	1.50	Kulgam'	Nearest 33 kV or 11 kV network		1.50	220 kV Mirbazar	132 or 33 kV
33	Zainoor Tallan Uri	0.03	Baramulla	Nearest 33 kV or 11 kV network.		0.03	220 kV Delina	132 or 33 kV
34	Cheelan-A Uri.	0.10	Baramulla	Nearest 33 kV or 11 kV network.		0.10	220 kV Delina	132 or 33 kV
35	Trisian	0.10	Anantnag	Nearest 33 kV or 11 kV network.		0.10	220 kV Mirbazar	132 or 33 kV
36	Rozakhan	0.10	Ganderbal	Nearest 33 kV or 11 kV network.		0.10	220 kV Alusteng'	132 or 33 kV
37	Ganeshbal, Pahalgam	0.10	Anantnag	Nearest 33 kV or 11 kV network.		0.10	220 kV Mirbazar	132 or 33 kV
38	Nunwan Pahalgam	0.10	Anantnag	Nearest 33 kV or 11 kV network.		0.10	220 kV Mirbazar	132 or 33 kV
	Total	40.55						
	Sites to be identified during the year 2012-13 by JAKEDA.							
	20 sites average capacity (1.5 MW)	30.00	Kashmir/ Jammu.					

(5)

S. No.	Developer	Installed Capacity (MW)	Location (Vill/Dist)	Transmission Scheme (details like name of line (D/C or S/C), voltage level (kV), length, Conductor type etc.		Max Injection (MW)	Name of 220 kV STU S/s for above Injection	Tr. System Beyond injection point.
				Immediate Evacuation	Associated Strengthening, if any			
	Small Hydro in Ladakh Region							
1	JKSPDC (Hanle)	9.00	Leh	66/11 KV Sub Stn.		9.00	--	--
2	JKSPDC (Dah)	9.00	Leh	66/11 KV Sub Stn.		9.00	--	--
3	JKSPDC (Bongdo)	9.00	Leh	33 kV network		9.00	--	--
4	JKSPDC (Dumsa)	9.00	Kargil	33 kV network		9.00	--	--
5	JKSPDC (Tamasha Nallah)	9.00	Kargil	33 kV network		9.00	--	--
6	KREDA (Kargil Renewable EDA)	19.00	Kargil	66/11 KV Sub Stn.		7.00		--
7	Leh Renewable EDA (micro hydro)	0.80	Togdang	33 kV line to be set up by LREDA under Ladakh Renewable Energy Initiative		0.56	to be set up under renewable energy initiative	
8	Leh Renewable EDA (micro hydro)	0.80	Chuntungkha			0.56		
9	Leh Renewable EDA (micro hydro)	0.45	Chumshen			0.315		
10	Leh Renewable EDA (micro hydro)	0.60	Henache			0.42		
11	Leh Renewable EDA (micro hydro)	0.50	Tsati			0.35		
12	Leh Renewable EDA (micro hydro)	3.00	Rongdo			2.1		
13	Leh Renewable EDA (micro hydro)	0.30	Sumda-Dho			0.21		
14	Leh Renewable EDA (micro hydro)	0.60	Shayok			0.42		
15	Leh Renewable EDA (micro hydro)	0.35	Durbuk II			0.245		
16	Leh Renewable EDA (micro hydro)	1.20	Waris II			0.84		
	Grand Total (Small Hydro)	361.80						

(D) Renewable Purchase Obligation (RPO) Quantum.

Min.Quantum of Purchase (in %) from RES (in terms of energy in kwh)				
Year	Wind	Solar	Biomass/WTT.	Total
2011-12	--	0.25	--	0.25
2012-13	--	0.25	--	0.25
2013-14	0.07	0.25		0.32
2014-15	0.13	0.25	--	0.38
2015-16	0.15	0.25	--	0.4
2016-17	0.15	0.25	--	0.4

CHIEF ENGINEER
T & S & O WING KMR

Appendix-II

Technology Trends

An overview of renewable generation technologies especially Wind, Solar and Small Hydro is given below:

Wind Turbine Technology

The wind turbine generator converts mechanical energy into electrical energy and airflows is used to run wind turbines. Wind turbine generators differ from conventional generators, as it has to generate electricity using highly fluctuating mechanical power i.e, wind. A schematic of wind based generation system is shown at Fig A.1

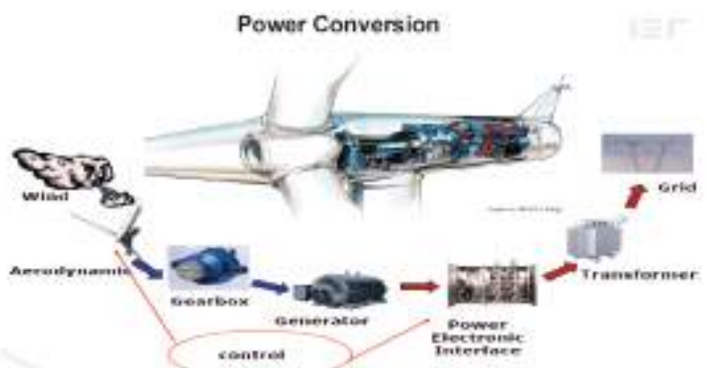

Fig-A.1: Wind Turbine Blocks

Based on the principle of operation, the wind generators are classified into the two types; asynchronous and synchronous

Asynchronous type wind generators

The most common generator used in wind turbines is the induction generator. It has several advantages, such as robustness and mechanical simplicity and economical.

When the rotor of the induction machine is rotated faster than the synchronous speed by a prime mover, it acts as a generator and feed power to the grid. An asynchronous generator allows slip, i.e deviations from the frequency of the

connected grid. In other words, the rotational speed is allowed to vary somewhat with the applied torque.

Induction generators are self exciting type and the stator needs a reactive magnetizing current hence consumes reactive power.

Synchronous type generators

Synchronous type generators always operate at constant speed, dictated by the frequency of the connected grid, regardless of the applied torque and there is no relative movement (slip) between rotor speed and synchronous speed of the rotating stator field. The synchronous generator is much more expensive and mechanically more complicated than an induction generator of a similar size.The magnetic field in the synchronous generator can be created by using permanent magnets or with a conventional field winding.

Wind Turbine Technology

Wind turbines can operate either with a fixed speed or a variable speed. Based on the operating speed categorisation, details of different types of generators are as under:

Fixed speed Generators

The fixed speed generators are directly connected to the grid using a Squirrel Cage Induction Generator (SCIG). The fixed speed SCIG consumes reactive power and can't contribute to voltage control. Schematic of fixed speed SCIG is shown at Fig A.2.

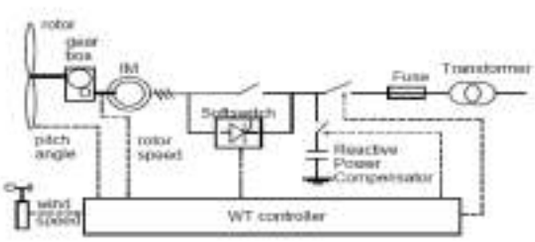

Fig-.A.2: Squirrel Cage Induction Generator

Wind turbine and the rotor of the generator is coupled with a gear box which is used to match the rotational speed of blades with that of generator. Typically, the speed range is 0–2% above synchronous speed, which is almost a fixed speed. The reactive power compensation is achieved by connecting capacitor bank on stator side. SCIG are typically equipped with a soft-starter mechanism for smoother grid connection. These are simple, low cost and low maintenance machines. The main drawbacks are low wind energy conversion efficiency, poor power factor, power fluctuation output and high mechanical stress on turbine components etc.

Variable speed wind generator

During the past few years the variable-speed wind turbine has become the dominant in market. The control flexibility offered by static converters in the variable-speed wind turbines make possible independent active and reactive power control exchanged between the machine and the grid. In addition, it also facilitates better use of the available wind energy and higher power production as the wind turbine can rotate at the optimal rotational speed for range of wind speed and the grid voltage control as the reactive power generation can be varied. It also keeps the harmonic contents injected into the grid by the power converter at low level improving the quality of the energy injected into the public grid. As disadvantages, variable speed wind turbines need a power electronic converter (PEC) that increases the component count, cost and make the control more complex.

The various configurations of the variable speed generator systems are as under :

(a) Wound Rotor Induction Generator with dynamic slip control

It is direct grid connected induction generator with variable generator rotor resistance. The variable speed conditions are achieved by dissipating energy within the resistors. This type of WRIGs also termed as Semi variable speed wind turbine with speed range of upto 10% above synchronous speed.

(b) Double-Fed Induction Generator (DFIG)

As compared to above WTG technologies, doubly fed induction generator, offers advantage of reduced capacity converter (PEC), decoupled control of active and reactive power and wider range of dynamic speed control (- 40% to + 30%).

In DFIG a power electronic converter is connected between the rotor circuit and the grid, this means that only the slip power is handled by the inverter and the rating of the inverter is often only 20%–30% of the generator rating. In this type of technology, the rotor is supplied with power from the grid such that over synchronous operation and sub synchronous operation of the generator is possible. Schematic of DFIG is shown at Fig A.3.

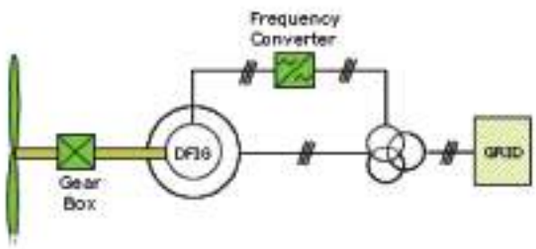

Fig-A.3: Double fed Induction Generator

A DFIG wind turbine can transmit power to the network through both the generator stator and rotor, depending upon the operating mode. Now-a-days manufacturers are offering this type of wind turbines with fault ride-through capabilities also.

(c) Direct driven (gearless) multi-pole Synchronous Generator

This type of technology offers advantage of full control of active/reactive power, operation at wide range of wind speed, better fault ride through as well as gearless connections. In this type of technology, generators are connected to the grid through full size PECs which performs the reactive power control and ensures smoother grid connection.

Variable speed operation is usually effected via an AC-DC-AC link. The variable frequency AC from the generator is rectified into DC and fed into the grid via an AC inverter. This concept permits wide range of speed variation as DC link circuit effects a complete decoupling of the rotor speed from the grid frequency. Schematic of synchronous WTG is shown at Fig A.4.

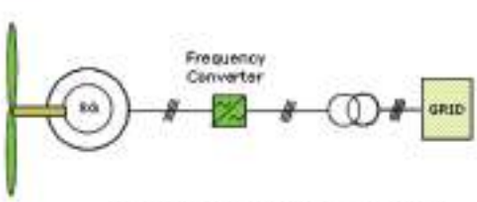

Fig-A.4: Synchronous Generator

Solar Power Technology

The sun is the largest source of energy in the form of heat and light energy. Solar Power plants convert the sun's energy into solar electricity. There are two types of solar power generation technologies:

(i) Concentrating

(ii) Non Concentrating (Photovoltaic)

Concentrating Solar Power

Concentrating Solar Power (CSP) systems use lenses or mirrors and tracking systems to focus a large area of sunlight into a small beam. The concentrated heat is then used as a heat source for a conventional power plant. A wide range of concentrating technologies exists; the most developed are the parabolic trough, the concentrating linear fresnel reflector, the Stirling dish and the Solar Power tower. Various techniques are used to track the Sun and focus light. In all of these systems a working fluid is heated by the concentrated sunlight, and is then used for power generation or energy storage. Schematic of parabolic trough and solar tower types CSP technology is shown at Fig. A.5 & A.6 respectively.

Fig-A.5: Parabolic Trough Collectors

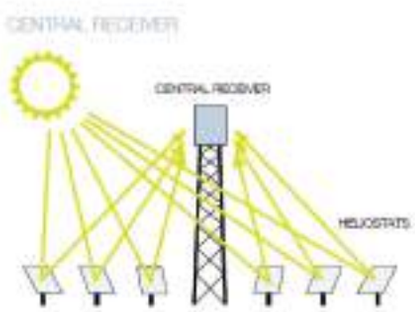

Fig-A.6: Solar Power Tower

Fig-A.7: Linear fresnel reflector

Fig-A.8: Stirling Dish

The major strength of CSP technology is large scalability to commercial sizes of capacities more than 50 MW.

Non Concentrating type (Photovoltaic)

A solar cell, or photovoltaic cell (PV), is a device that converts light into electric current using the photoelectric effect. The photovoltaic cells produce DC power, which fluctuates with the intensity of the irradiated light. This usually requires conversion to certain desired voltages or alternating current (AC), which requires the use of the Inverters. Multiple solar cells are connected inside the modules. The modules are wired together to form arrays, then tied to inverter, which produces power with the desired voltage, and frequency/phase. A typical PV based solar power plant connected with the grid is shown at Fig A.9

Fig-A.9 : Grid Connectivity of Solar Power Farms

Small Hydro Power Stations

Hydro power projects are generally categorized in two segments i.e. small and large hydro. In India, hydro plants up to 25 MW capacity have been categorized as Small Hydro Power (SHP) projects. While Ministry of Power, Government of India is responsible for large hydro projects, the mandate for the Small Hydro Power (up to 25 MW) is given to Ministry of New and Renewable Energy. Small hydro power projects are further classified as

Class	Station Capacity (kW)
Micro Hydro	Up to 100
Mini Hydro	101 to 2000
Small Hydro	2001 to 25000

Small and Mini hydel projects have the potential to provide energy in remote and hilly areas where extension of grid system is un-economical. The plants are often operated in isolation or are connected to local grids. These projects are economically viable, environmentally benign, need a relatively short time for implementation and are not generally affected by the constraints associated with large hydro projects. Schematic of a typical small hydro station is depicted at Fig A.10.

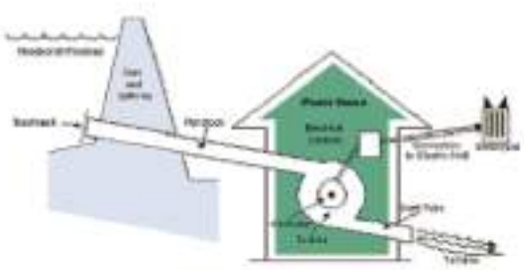

Fig-A.10: Small Hydro Power Plant

A small-scale hydroelectric facility requires that a sizable flow of water and a proper height of fall of water, called head. Small hydro is often developed using existing dams or through development of new dams whose primary purpose is river and lake water-level control, or irrigation. Occasionally old, abandoned hydro sites may be purchased and re-developed, sometimes salvaging substantial parts of the

installation such as penstocks and turbines, or sometimes just re-using the water rights associated with an abandoned site.

Application of RE Technologies in Indian Context

In Indian context, with increasing wind penetration, it is desirable that Wind turbine must support grid operation like any other conventional generators in terms of ancillary services support like voltage control, frequency response etc. It must also contribute positively to system stability, fault recovery, power quality and the performance of the protection system. With latest technology development, above features can be incorporated in DFIG as well as Synchronous Generators. Therefore, in India, adoption of technologies in WTGs with above feature is desirable.

In India, at present, majority of Solar generating plants are through Non Concentrating type i.e. Solar PV and CSP is still at very nascent stage of development. CSP being more efficient and economical for large scale establishment, this must be encouraged in coming times. In addition, solar thermal with storage (molten salt technology) can be used as manageable / dispatchable generation, which may be immensely useful to meet intermittency of other renewables to a large extent.

References :

1. Edward Muljadi, Abraham Ellis, National Renewable Energy Laboratory (NREL): Final Project Report WECC Wind Generator Development
2. Thomas Ackermann, Wind Power in Power Systems, Wiley publications
3. A presentation on 'Types of Generators in Wind Turbines' by Centre for Wind Energy Technology, Chennai
4. Robert Foster, Majid Ghassemi, Alma Cota Solar Energy :Renewable Energy and the Environment, CRC Press